JuicePump 150

INSTALLATION AND USER'S MANUAL

WWW.ENELX.COM

PHONE NUMBER:+1-844-584-2329

PLEASE NOTE

This document contains useful general information about the product and its installation. Enel X. reserves the right to make changes to this product without further notice. No part of this document may be reproduced in any form or by any means, electronic or mechanical, including photocopying, without written permission of Enel X.

Changes or modifications to this product by other than an authorized service facility could void the product warranty.

If you have questions about the use of this product, contact your customer service representative.

This product should be operated by trained personnel only.

Table of Contents

1. Safety Guidelines 5
1.1. Important Safety Instructions 5
1.2. Symbols and Definitions 6
2. System Overview 7
3. Equipment Description 8
4. System Specification 11
4.1. DCFC Power Unit 11
4.2. DCFC Dispenser 12
5. Pre-Installation 13
5.1. Location Selection 13
5.2. Cable Reach 14
5.3. ADA Consideration 15
5.4. List of Parts, Materials, and Tools Needed for Installation 17
6. Transportation and Handling 18
6.1. Packaging 18
6.2. Transport, Handling, and Storage 18
6.3. Receiving and Unpacking 19
7. Installation 20
7.1. Moving and Hoisting Instructions 21
7.2. Mounting Procedures 24
7.2.1. Clearance Around the Unit 24
7.2.2. Tower and Dispenser Mounting 25
7.3. Electrical and Communication Service Connection 28
7.4. Ethernet Port Location 36
8. Verification and Inspection 38
9. Operation 39
9.1. System Power Up 39
9.2. Output Connectors 40
9.2.1. CHAdeMO Connector (200 A) 40

Table of Contents (Continuation)

9.2.2. CCS1 Connector (500 A) 41
9.2.3. CCS1 Connector (200 A) 41
9.3. Operating Instruction 42
9.4. Troubleshooting 46
10. Maintenance 54
11. Product Disposal 59
12. Appendix 60
12.1. Component Information 60
a) CCS1 High-Power Liquid Cooled Coupler (500A Rated) 60
b) Cooling Unit System 61
c) Cool Cable Coolant 62
d) SAE J1772 CCS1 Coupler (200A Rated) 64
e) CHAdeMO High Power Coupler (200A Rated) 64
12.2. Cooling Unit System Overview 65
a) Main Parts 65
b) Refiling Coolant in Cooling Unit Tank 65

1. Safety Guidelines

SAVE THESE INSTRUCTIONS

This document contains important instructions for the installation, operation, and maintenance of the **JuicePump 150**. These instructions should be retained for future reference.

1.1. Important Safety Instructions

DANGER

READ THIS MANUAL BEFORE YOU BEGIN

This **JuicePump 150** manages electricity and may be hazardous. The equipment should be installed, adjusted, and serviced only by qualified electrical personnel familiar with the construction and operation of this type of equipment and the hazards involved, and in full compliance with all local and national codes and standards. Failure to observe this precaution could result in severe injury or death.

Read this manual completely and become familiar with the equipment prior to performing any procedures specified in the manual and energizing the equipment. Inspection and maintenance of this equipment should be performed in accordance with the procedures detailed in this manual.

In situations where it is not possible to perform an installation following the procedures stated in this document, contact Enel X. Enel X will not be responsible for any damages that may occur resulting from custom installations that are not stated in this document.

There are no user serviceable parts inside. For service, please contact customer service or your local distributor. **DO NOT ATTEMPT TO REPAIR THE CHARGE STATION YOURSELF. SERVICE TO THE UNIT SHALL ONLY BE PERFORMED BY A QUALIFIED PERSONNEL.**

If the charging cable is somehow damaged, do not operate the charge station. Contact your service representative for service immediately. Shut down the power to the tower by switching the breaker on the supply panel to the off position.

1.2. Symbols and Definitions

Please take special attention to all information marked with the following symbols. These symbols may be found throughout the manual and on labels affixed to the equipment unit.

	DANGER	Indicates High Voltage. It calls attention to items or operations that could be dangerous to person/s operating this equipment. Read and follow the instructions carefully. Failure to do so will result in severe injury or possibly death.
	WARNING	Indicates a hazard or unsafe practice which, if not avoided, may result in severe injury or possibly death.
	CAUTION	Indicates a hazard or unsafe practice which, if not avoided, may result in minor to moderate injury.
	NOTE	Indicates important information to consider, otherwise, improper installation and/or damage to components may occur.

2. System Overview

The **JuicePump 150** converts a 480VAC 3-phase voltage into DC voltage to directly charge an electric vehicle's lithium-ion battery. It is capable to charge all electric vehicles compliant with CHAdeMO charging system and Combined Charging System (CCS) standards.

The charger is composed of a 150kW Power Unit (with 3 individual 50kW power modules on it) and one or two dispenser/s depending on the configuration. The dispensers can either be a Dual CCS or CCS/CHAdeMO configuration and a 350A or 200A rated.

- **SIMPLIFIED BLOCK DIAGRAM (1-DISPENSER SYSTEM):**

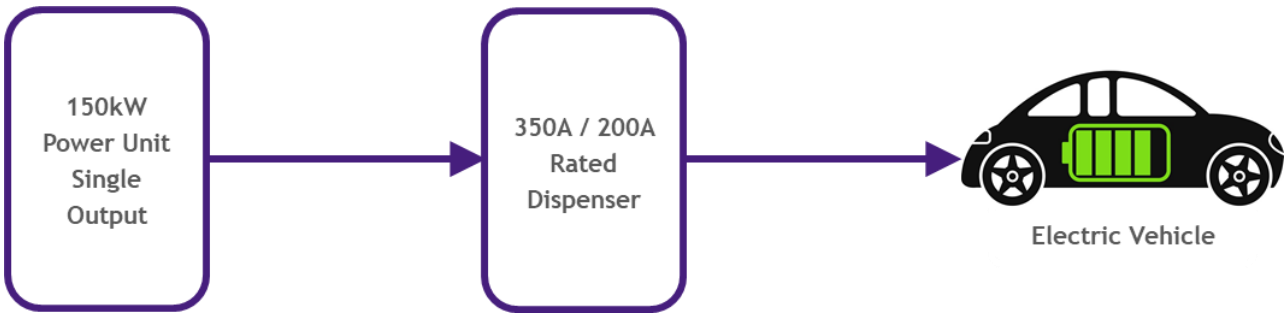

- **SIMPLIFIED BLOCK DIAGRAM (2-DISPENSER SYSTEM):**

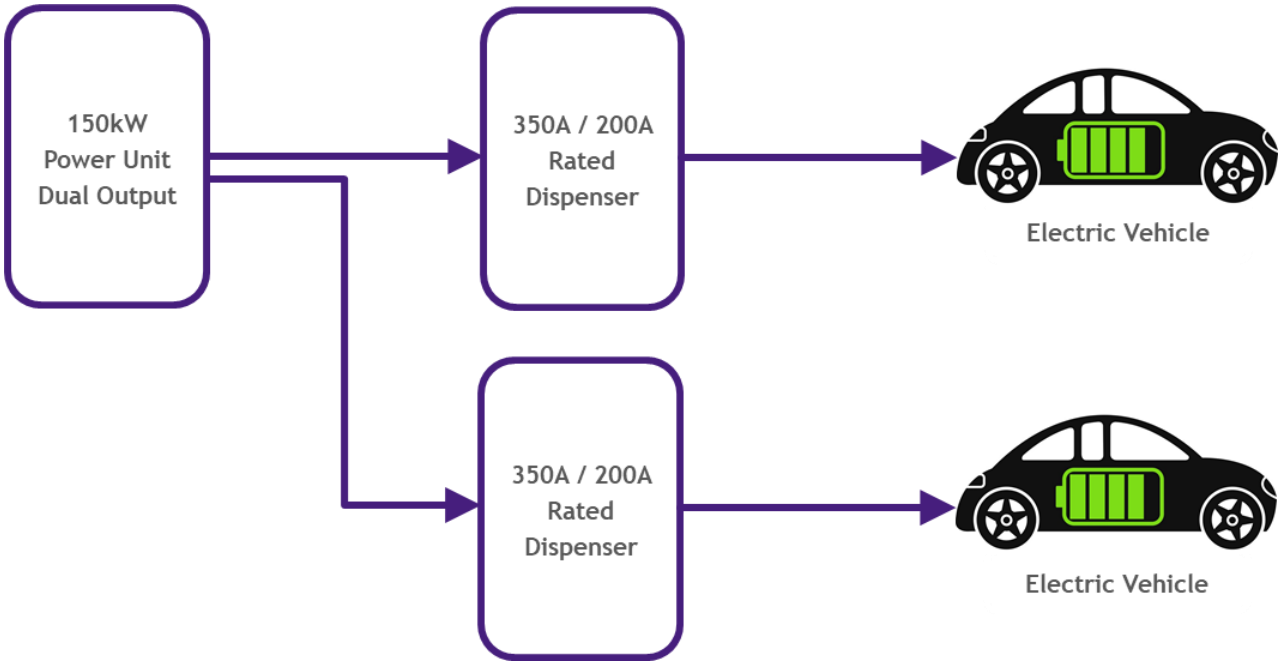

3. Equipment Description

150 kW HIGH POWER UNIT / TOWER

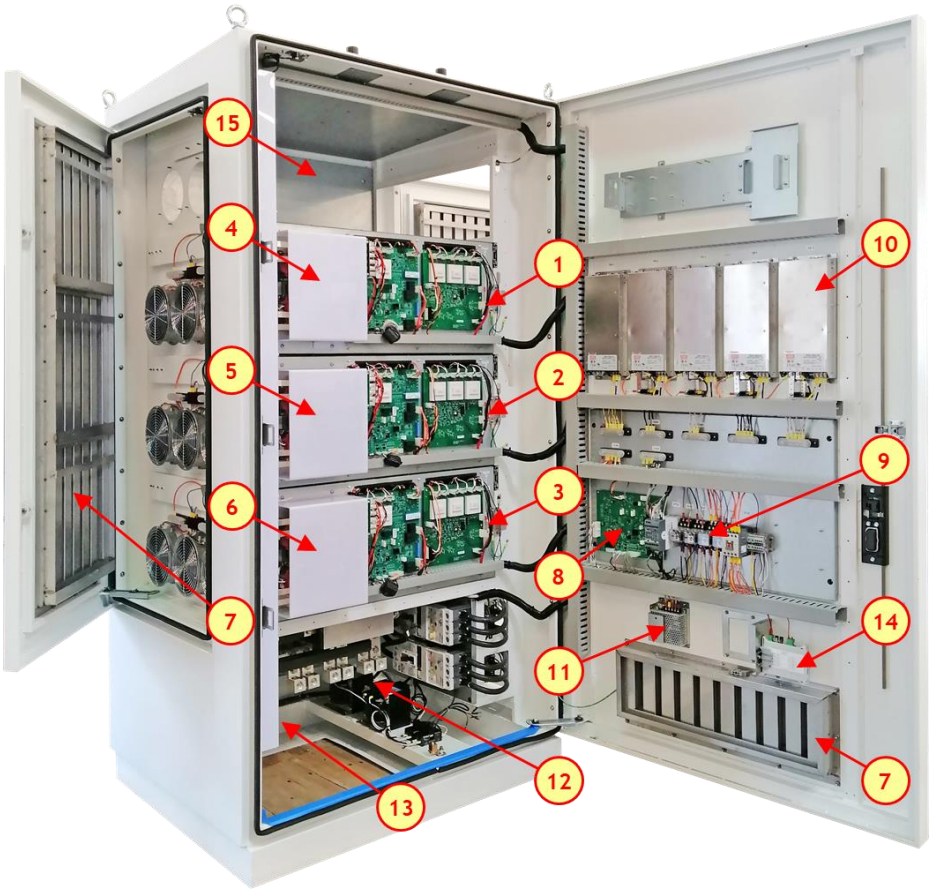

COMPONENT DESCRIPTION

1. 50KW #3 Power Module
2. 50KW #2 Power Module
3. 50KW #1 Power Module
4. Output Contactors (+/-) Power Module #3
5. Output Contactors (+/-) Power Module #2
6. Output Contactors (+/-) Power Module #1
7. Air Vent
8. Master Controller
9. Safety Relays
10. 24VDC Power Supplies
11. 12VDC Power Supply
12. Input Section
13. Output Section
14. Optical Transceivers
15. Empty slot for 50kW upgrade

** Power Module #4 as optional upgrade*

EQUIPMENT DESCRIPTION

350A / 200A CHARGE DISPENSER

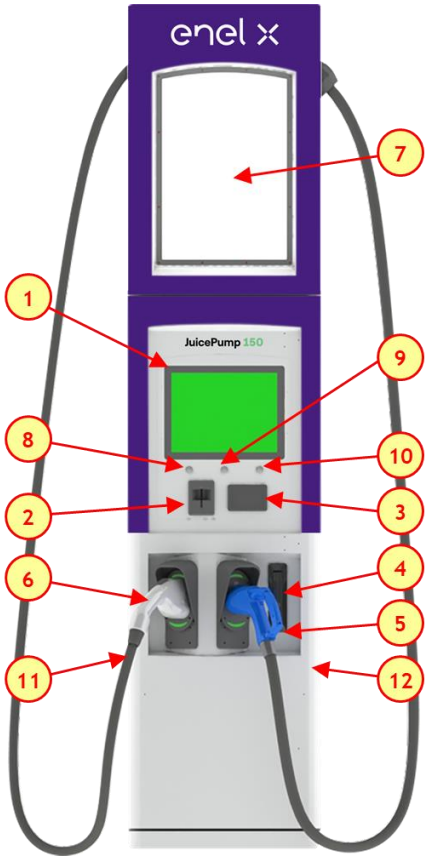

COMPONENT DESCRIPTION

1. 15-inch Outdoor-Rated Display and Touch Screen
2. Magnetic stripe Credit Card Reader
3. RFID Card Reader
4. High Security Lock
5. Charging Connector 1
6. Charging Connector 2
7. Customer Advertising Panel
8. Start Button / Function Key 1
9. Stop Button / Function Key 2
10. Emergency Stop Button / Function Key 3
11. Air Inlet (left side)
12. Air Exit (right side)

SYSTEM COMPONENTS

Power Unit / Tower

ITEM	DESCRIPTION	MODEL NUMBER	SKU
1	DCFC Power Unit Dual Output, SCCR 65kA	EVPC-150-2-480-3-65	HPCT-150-480-2

Dispenser

ITEM	DESCRIPTION	MODEL NUMBER	SKU
2	DCFC 350A Dispenser, CCS/CHAdeMO	EVDSP-350-5-120-0-2-C-4-0	HPCD1-350-01-003
3	DCFC 350A Dispenser, Dual CCS	EVDSP-350-4-120-0-2-C-4-0	HPCD1-350-02-003
4	DCFC 200A Dispenser, CCS/CHAdeMO	EVDSP-200-5-120-0-2-C-4-0	HPCD1-200-01-003
5	DCFC 200A Dispenser, Dual CCS	EVDSP-200-4-120-0-2-C-4-0	HPCD1-200-02-003

4. System Specification

4.1. DCFC Power Unit

AC to DC Power Converter Specification

Model Number: **EVPC-150-2-480-3-65**
SKU: **HPCT-150-480-2**

PARAMETER	150kW POWER UNIT / TOWER
AC Input	
Input Voltage Range	480 VAC, 3 Phase, +10% / -15%
Input Frequency Range	47 – 63 Hz
Input Current @ 480 VAC	198 A
Power Factor	> 0.99 full load
Total Harmonic Distortion	< 5%
Efficiency	> 92%
SCCR	65 kA
Idle Power Consumption	159.5 W
DC Output	
Output Voltage Range	50 – 920 VDC
Maximum Output Current	CCS: 350 A, CHAdeMO: 200 A
Maximum Output Power	150 kW
Minimum Output Current	5 A
Output Ripple Current	< 15 Ap–p (Bandwidth 1 kHz)
Protection	
Over Temperature	Self–protected and Latched
Output Over Voltage	Output Shutdown and Latched
Output Overload	Output Shutdown and Latched
CAN Communication Loss	1 sec Shutdown Upon Loss of Connection
Safety Standards	
Isolation	UL 2231–1/2, UL 840
EMC Standards	
Harmonics	IEC 61000-3-12
Immunity	UL 2231-2
Environment Conditions	
Operating Temperature Range	-30°C to +50°C
Operating Altitude	6,000 ft.
Humidity	95% Non-Condensing
Mechanical Characteristics	
Dimensions	42" W x 35" D x 82" H
Weight	1892 lbs
Enclosure IK Rating	IK 08
Enclosure IP Rating	IP 54 (NEMA 3R)

Specifications are subject to change without prior notice.

4.2. DCFC Dispenser

High Power Dispenser Specification

Model Numbers: **EVDSP-350-5-120-0-2-C-4-0, EVDSP-350-4-120-0-2-C-4-0**
EVDSP-200-5-120-0-2-C-4-0, EVDSP-200-4-120-0-2-C-4-0
SKUs: **HPCD1-350-01-003, HPCD1-350-02-003, HPCD1-200-01-003, HPCD1-200-02-003**

PARAMETER	DISPENSER	
	350A Rated	200A Rated
AC Input		
Auxiliary Input Voltage	120 VAC, Single phase, +/-10%	
Auxiliary Input Current	21 A	10 A
Input Frequency Range	47 – 63 Hz	
Panel Breaker	30 A	
Power Quality	IEEE-519 and IEC 6200-3-4	
Idle Power Consumption	143.06 W	
DC Input		
Input Voltage Range	50 – 920 VDC	
Input Current Range	5 – 500 A	
DC Output		
Dual CCS Configuration		
Maximum DC Output Current CCS, continuous	350 A 500 A (boost mode; non-continuous)	200 A
CHAdeMO + CCS Configuration		
Maximum DC Output Current CHAdeMO, continuous	200 A	200 A
Maximum DC Output Current CCS, continuous	350 A	200 A
Environment Conditions		
Operating Temperature Range	-30°C to +50°C	
Operating Altitude	6,000 ft.	
Humidity	95% Non-Condensing	
Mechanical Characteristics		
Outdoor Enclosure	NEMA 3R, IP 54 equivalent	
Dimensions	22" W x 15" D x 97" H	
Weight	600 lbs	
LED Lighting System	580 lumens	

5. Pre-Installation

Prior performing any installation activities, it is important to go through each of the items outlined in this section which are essential for the installation process.

5.1. Location Selection

Thing to consider when choosing a location to install the unit:

- Standards for Accessible Design (refer to section 5.3)
- Conformance to all governing standards for location and placement of the charger
- Communications Connectivity
  - Refer to Enel X guidelines in "Determining Suitability of Site for Cellular Connectivity"
  - Ensure that installation location meets the Cellular Signal Strength Criteria below

Parameter	Min Value	Device	Notes
RSSI	-69 dBm	SureCall	If RSSI < - 69dBm, measure RSRP, RSRQ, and SNIR
RSRP	-100 dBm	Squid or -Cellular Meter	Please consult Enel X Application Engineering
RSRQ	-11 dBm	Squid or -Cellular Meter	Please consult Enel X Application Engineering
SNIR	> 6 dB	Squid or -Cellular Meter	For Reference

- Local Conditions
  - Area is not expose to high temperatures, dust, corrosive fumes, combustible materials, or explosive gases
  - Area is dry and well-ventilated
  - Clearances at both sides for proper ventilation
  - Clearance at front and sides for accessibility during service (refer to Section 7.2.1)
  - Wiring and conduit needed to connect the charger to the circuit panel
  - Location of vehicle's charging inlets while parked
  - Use of protective bollards and wheel stops to protect the charger

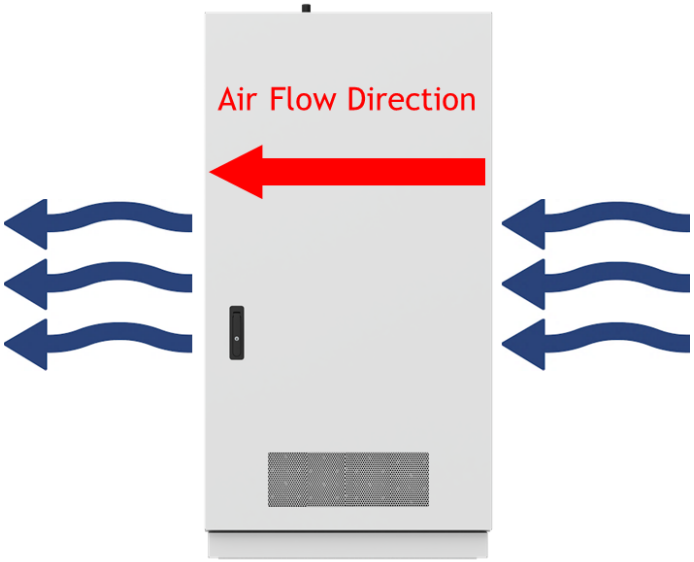

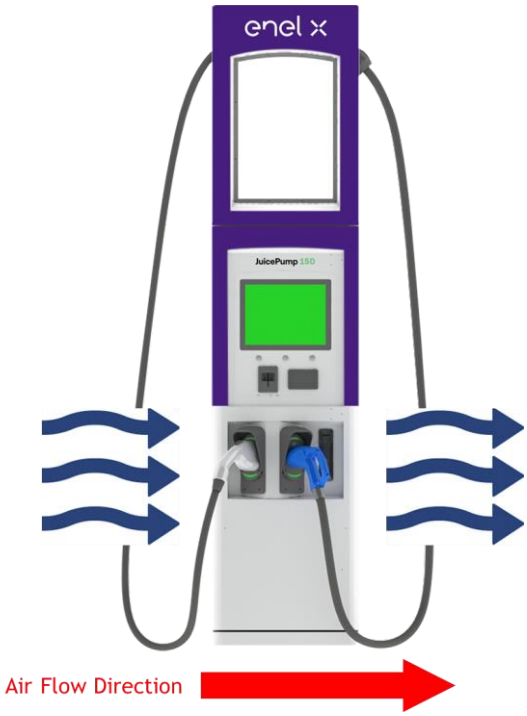

5.2. Cable Reach

The cables of the dispenser come in different lengths depending on the dispenser configuration and cable/connector type. The table below shows the connector type with its corresponding cable reach while the figure shows the radius in which the two (2) DC connectors can be used.

Dispenser	Connector	Cable Reach
HPCD1-350-01-003	CCS1 (500A)	11.15 feet
	CHAdeMO (200A)	10.5 feet
HPCD1-350-02-003	CCS1 (500A)	11.15 feet
	CCS1 (500A)	11.15 feet
HPCD1-200-01-003	CCS1 (200A)	13 feet
	CHAdeMO (200A)	10.5 feet
HPCD1-200-02-003	CCS1 (200A)	13 feet
	CCS1 (200A)	13 feet

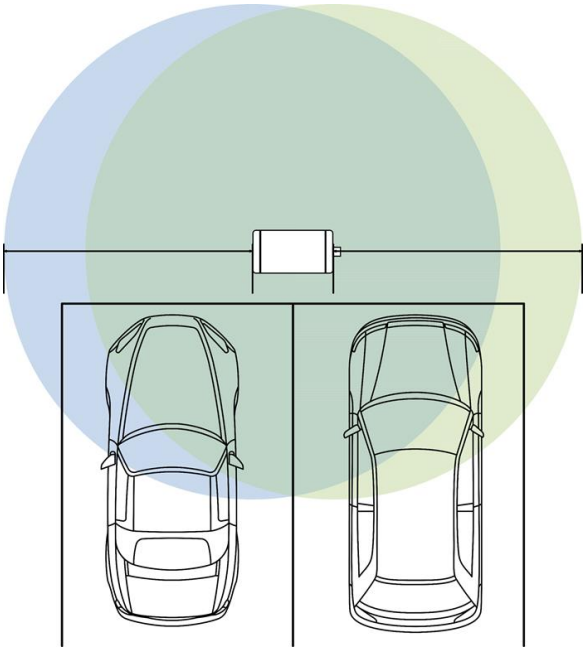

5.3. ADA Consideration

STANDARDS FOR ACCESSIBLE DESIGN for Americans with Disabilities is applicable when choosing the location and placement of all Electric Vehicle Supply Equipment. The following is a direct excerpt from the 2010 ADA Standards for Accessible Design:

http://www.ada.gov/2010ADAstandards_index.htm

"The Department of Justice published revised regulations for Titles II and III of the Americans with Disabilities Act of 1990 "ADA" in the Federal Register on September 15, 2010. These regulations adopted revised, enforceable accessibility standards called the 2010 ADA Standards for Accessible Design "2010 Standards" or "Standards". The 2010 Standards set minimum requirements – both scoping and technical – for newly designed and constructed or altered State and local government facilities, public accommodations, and commercial facilities to be readily accessible to and usable by individuals with disabilities.

Adoption of the 2010 Standards also establishes a revised reference point for Title II entities that choose to make structural changes to existing facilities to meet their program accessibility requirements; and it establishes a similar reference for Title III entities undertaking readily achievable barrier removal.

The Department has assembled this online version of the official 2010 Standards to increase its ease of use. This version includes:

- 2010 Standards for State and Local Government Facilities Title II
- 2010 Standards for Public Accommodations and Commercial Facilities Title III

The Department has assembled into a separate publication the revised regulation guidance that applies to the Standards. The Department included guidance in its revised ADA regulations published on September 15, 2010. This guidance provides detailed information about the Department's adoption of the 2010 Standards including changes to the Standards, the reasoning behind those changes, and responses to public comments received on these topics. The document, Guidance on the 2010 ADA Standards for Accessible Design, can be downloaded from:

http://www.ada.gov

For information about the ADA, including the revised 2010 ADA regulations, please visit the Department's website www.ADA.gov; or, for answers to specific questions, call the toll-free ADA Information Line at 800- 514-0301 (Voice) or 800-514-0383 (TTY)."

Compliance to ADA Standards

Access to all the controls and commands including the buttons and the card reader, must comply with local codes and ADA requirements. That includes being under 48" of distance to the ground.

Height Dimensions

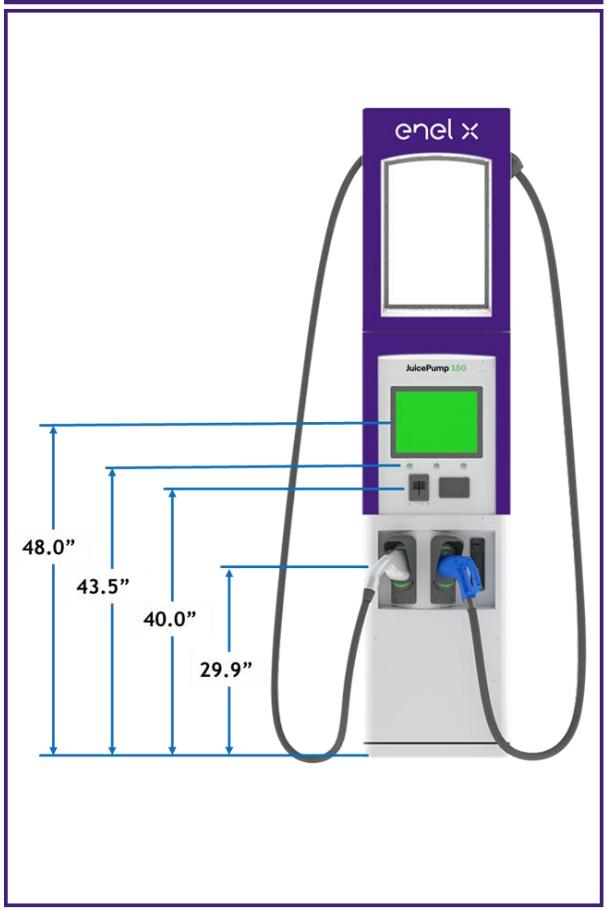

ADA Forward & Side Reach Limits

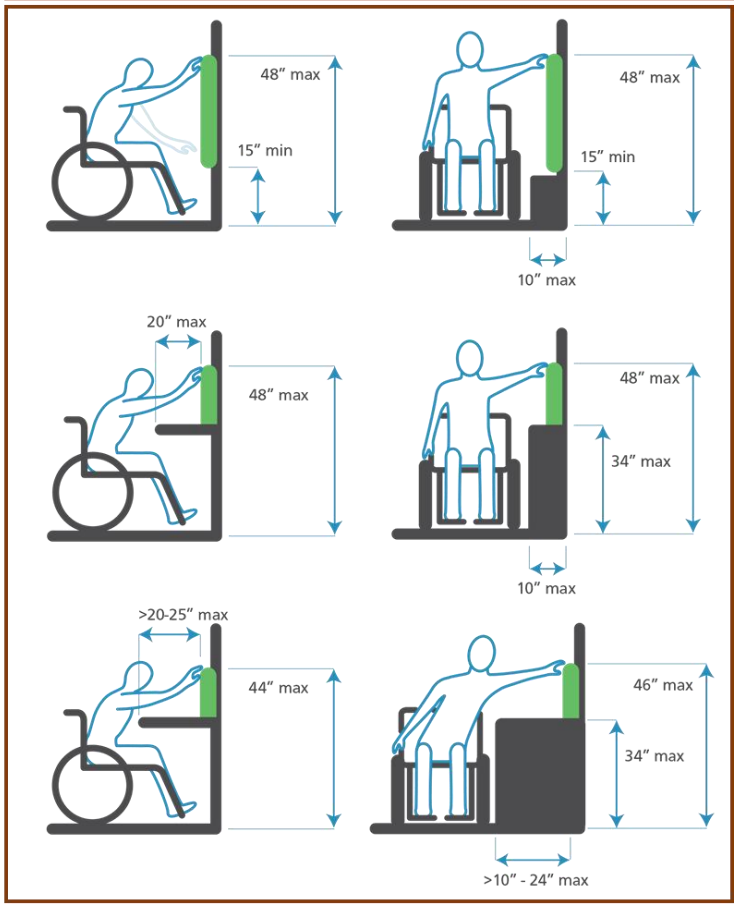

5.4. List of Parts, Materials, and Tools Needed for Installation

Parts & Materials Needed to Purchase

Item	Part Description	Quantity	Remarks
1	OM3, multimode, 50/125µm, ST connectors on both ends	2 pairs per dispenser	Recommended supplier: https://fibercablesdirect.com/
2	18AWG Twisted Pair, Shielded, Interlock Cable	1	
3	DC Wire	1 pair per dispenser	
4	AC 120VAC Wire	1 pair per dispenser	
5	Ethernet Cable	1 per dispenser	

**Note: Extra sets of Fiber Optic Connectors are needed as back-up since these breaks easily.*

Tools Needed during Installation

Item	Part Description	Quantity
1	Philips Head Screwdriver	1
2	½" x 4" Concrete Expansion Bolt	4
3	½" Torque Wrench	1
4	Allen Wrench Set	1
5	Keys (shipped with the unit)	1

6. Transportation and Handling

6.1. Packaging

The power unit/tower and dispenser are packaged, shipped, and delivered in wood crates. Below are the details of its packaging and dimensions for both tower and dispenser.

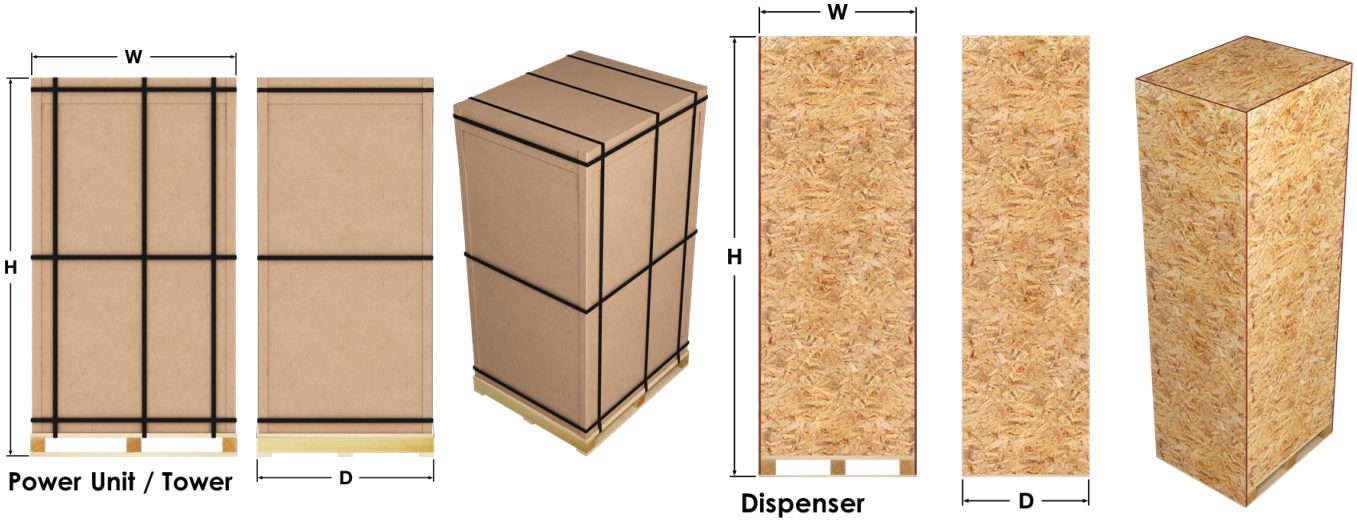

Item	Width (in)	Depth (in)	Height (in)	Weight (lb)
Power Unit/ Tower	49	42	90	up to 1998
Dispenser	37	30	103	up to 740

6.2. Transport, Handling, and Storage

Transport

The tower and dispenser must be transported upright or in vertical position. Liquid may leak or other materials may get damaged if tilted or transported on its side.

Moving and Hoisting

Forklift or pallet truck can be used in moving or transporting the tower and dispenser. In addition to this, the tower and dispenser can be moved or lifted using the lifting eye bolts.

Refer to section 7.1 for more details.

Storage

The tower and dispenser must be stored in its original wood packaging in a dry environment from -30°C to +50°C.

6.3. Receiving and Unpacking

Receiving Instructions

Once shipment is received, please follow these receiving instructions. It is the responsibility of the receiver to perform visual inspection on the shipment and immediately notify Enel X Project Manager for any damage.

- Unload and carefully inspect the crate or packaging for any damage caused by mechanical impacts or any incidents during its transportation.
- Inspect the Tip N Tell tilt indicator attached on the crate. Tip N Tell tilt indicator provides information of the shipment conditions during transit. Blue beads in arrow indicates crate has been on its side or tipped over in transit.

- Note on the delivery receipt any visible damage to the crate/packaging or shipment has been tipped based on the Tip N Tell tilt indicator. Provide information of the damage as detailed as possible.
- For any issues or questions regarding the shipment, please call **Enel X Shipment In-charge** at **(714) 706 – 4970**.

7. Installation

SAFETY INSTRUCTIONS

The **JuicePump 150** should be installed in accordance with local codes and all applicable ordinances.

Read all installations instructions carefully prior to performing the installation.

DANGER

The equipment utilizes high voltages, only qualified electrical personnel familiar with the operation and construction should install, adjust, modify, and service this equipment. Failure to observe this precaution could result to severe injury or death.

WARNING

- **The equipment may be installed outdoors but only use under environment conditions as stated in this document.**
- **Do not perform any live wire operations.**
- **Do not touch the inside of the equipment while it is running.**
- **This equipment includes capacitive components such as electrolytic capacitors. Some parts may still remain charged inside of the unit even after the input power is disconnected.**
- **This charger should not be modified in any way. This will void the warranty, compromise protection and could result in a possible shock or fire hazard.**
- **Personal Protective Equipment should be used at all times when working with the equipment.**

CAUTION

During installation of the unit, ensure that the charge station's supply cable is in such a way that it will not be tripped over, stepped on, pulled on, or somehow subjected to damage or stress.

7.1. Moving and Hoisting Instructions

CAUTION

Improper handling may result to severe injury and/or damage to the unit due to dropping or falling. Make sure to follow specified procedures for hoisting operations. Take necessary measures to prevent falling when moving or hoisting the unit.

Using Forklift or Pallet Jack

- Care should always be taken when lifting the charger using a forklift or pallet jack.
- Forks should be extended completely under the unit to avoid accidents.

Using Lifting Eye Bolts

The Power Unit / Tower comes with four (4) M12 Lifting Eye Bolts positioned at each corner of the unit enclosure's top surface.

The Working Load Limit (WLL), commonly referred as Lifting Capacity, of the M12 Lifting Eye Bolt is 340kg or equivalent to **749 lbs**. Eye bolt capacity reduces as the vertical angle increases.

Use eye bolts at a vertical angle of no more than 15°. Eye bolt strength at 15° angle drops down to 80% of vertical lifting capacity.

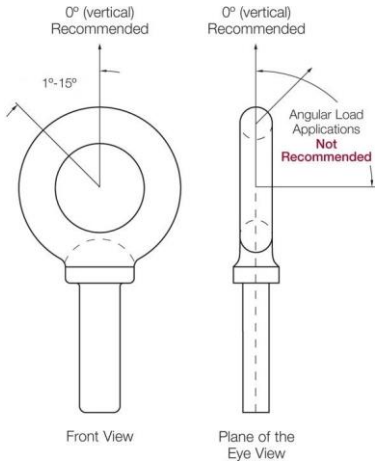

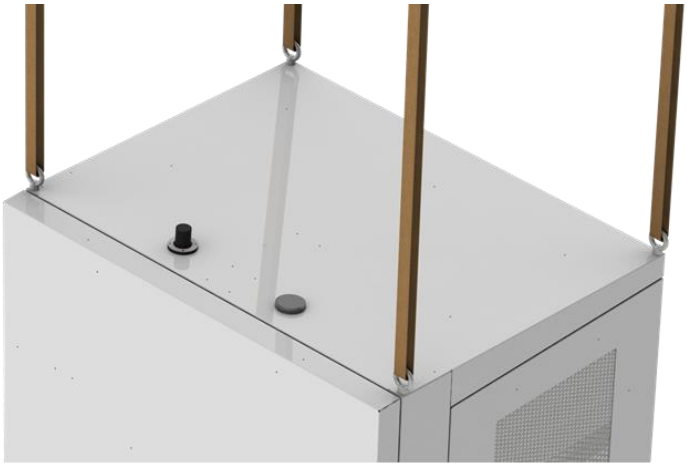

Tower

Dispenser

Enel X's recommendation in reference to the M12 lifting eye bolt specification and the charger's maximum weight, is to use all four (4) eye bolts and keep the **vertical angle between 0° to 15°** when lifting.

- **Calculation**
  - Total Lifting Capacity (4 eye bolts) = 4 x 749 lbs = **2,996 lbs**
  - Estimated Tower Weight = **1892 lbs**
  - Estimated Dispenser Weight = **600 lbs**
  - Total Lifting Capacity at 15° (20% reduction) = 80% x 2,996 lbs = **2,397 lbs**

NOTE

After the Power Unit / Tower is fixed on its location, the lifting eye bolts must be removed, and end sealing protections must be inserted into the holes.

POWER UNIT / TOWER

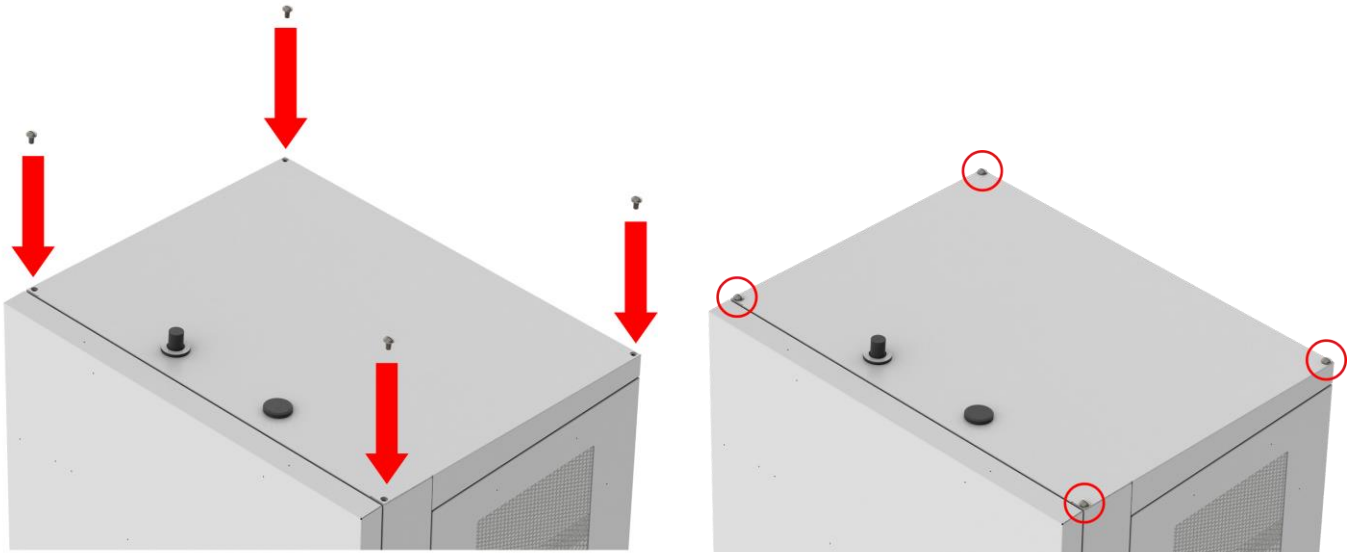

DISPENSER

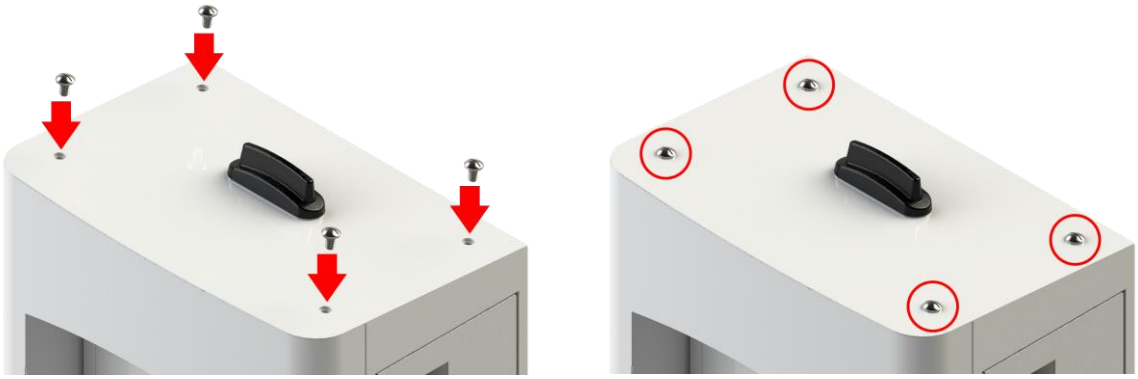

7.2. Mounting Procedures

7.2.1. Clearance Around the Unit

Clearance surrounding the unit must be considered for proper ventilation and service accessibility. Refer to the installation drawings as illustrated below.

Power Unit / Tower Installation Drawing

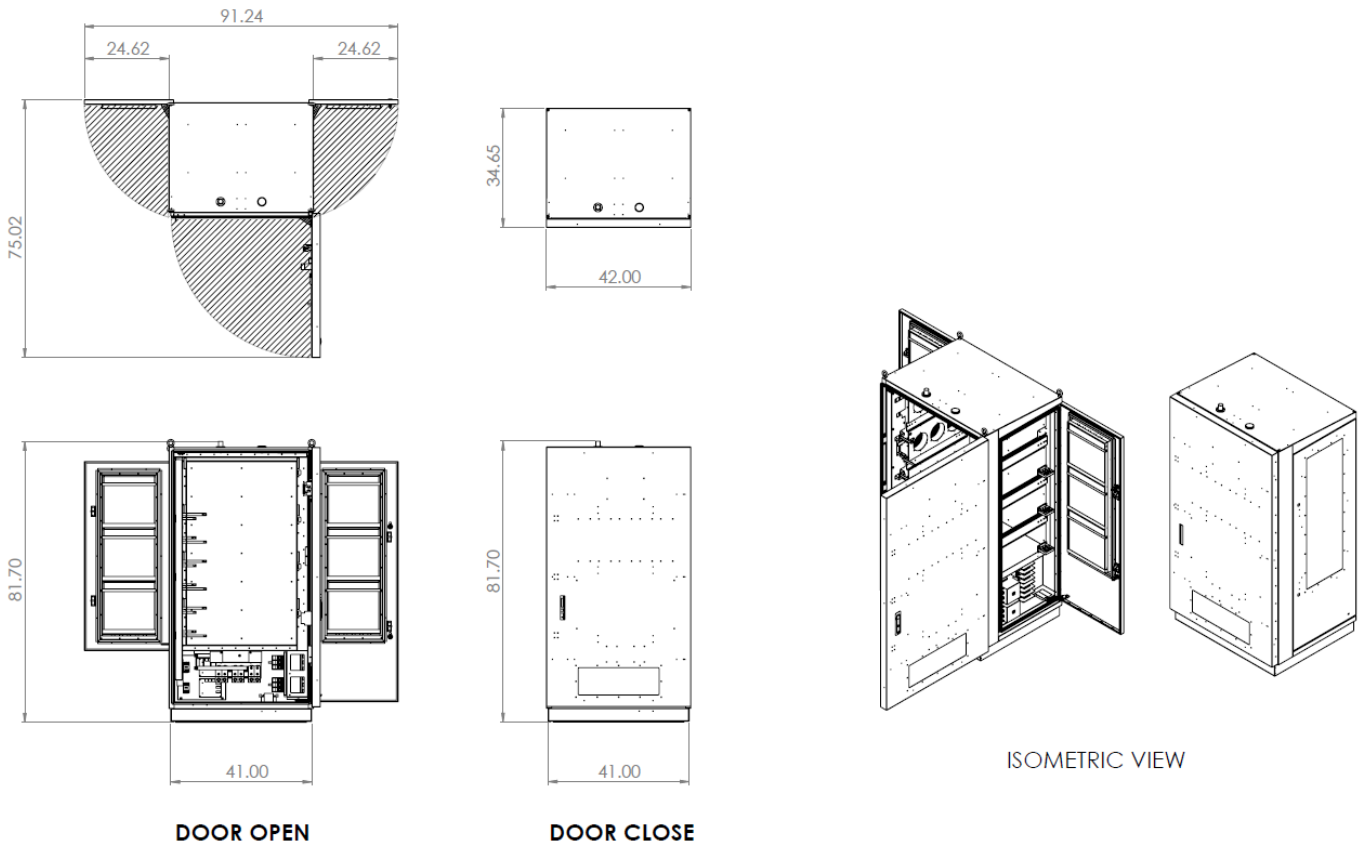

Dispenser Installation Drawing

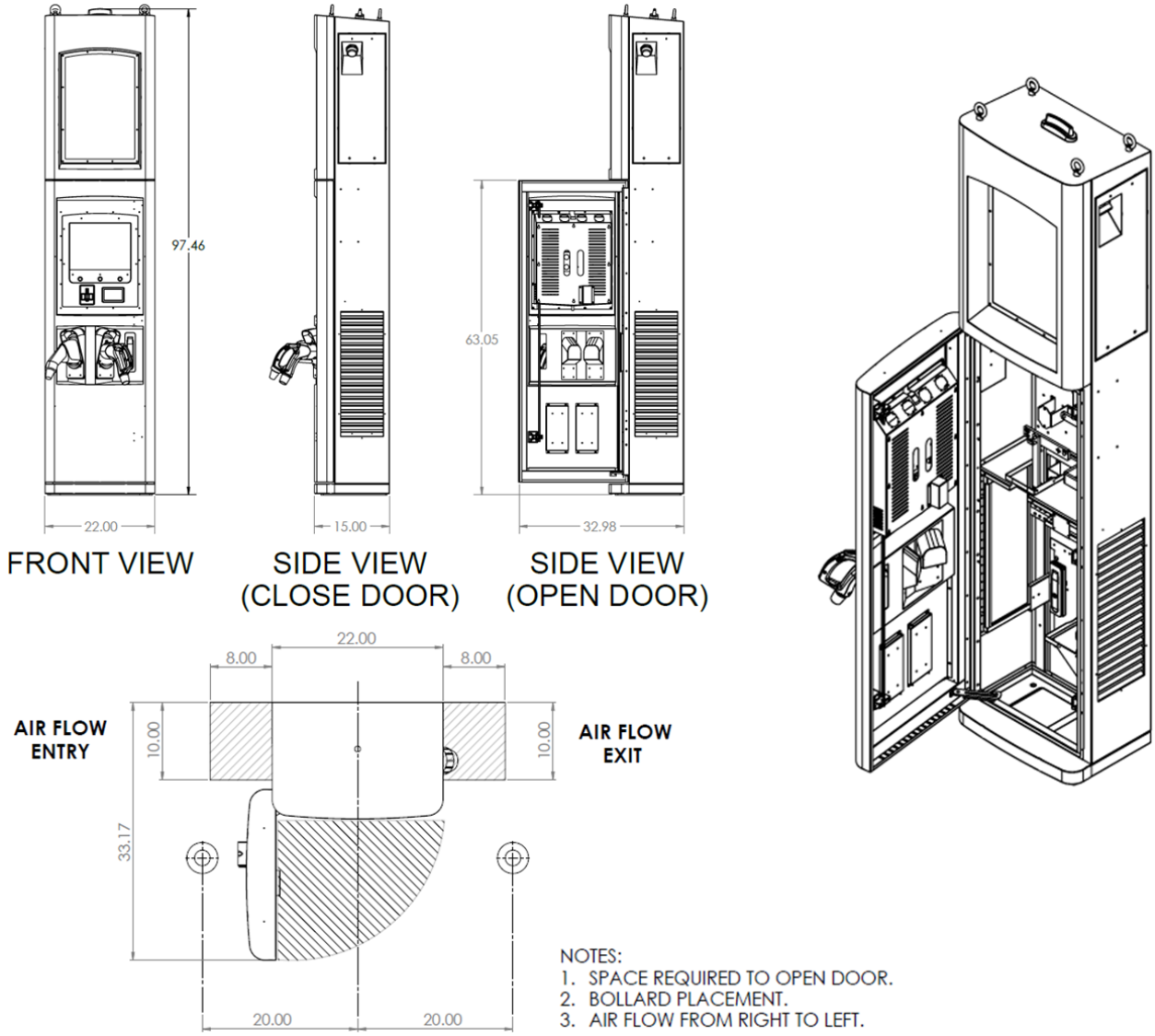

7.2.2. Tower and Dispenser Mounting

Both the Tower and Dispenser must be fixed on a concrete pad using four (4) ½" x 4" (P/N RHPA-3830) concrete expansion bolts or as determined appropriate by the structural engineer in-charge.

Make sure to check local codes for compliance.

Power Unit / Tower Footer Drawing

The illustration below shows the drilling layout for the **Power Unit / Tower**. Only four (4) points are needed to fix the unit on the concrete pad. The conduit entry to the unit is also shown.

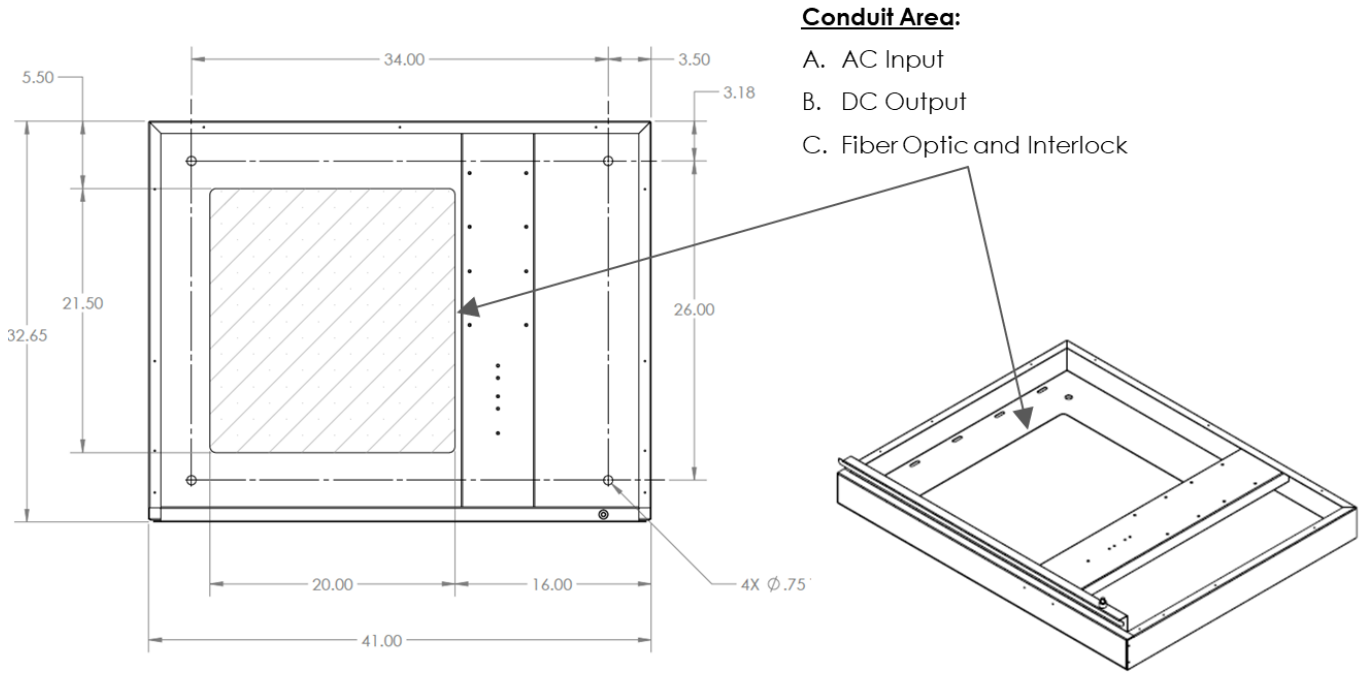

INSTALLATION FOOTER VIEW ISOMETRIC VIEW

Base foundation template for alignment and hole location is available in .step or .dxf files upon request.

NOTE

The bottom of the tower needs to be sealed to the ground.

Dispenser Footer Drawing

The illustration below shows the drilling layout for the **Dispenser**. Only four (4) points are needed to fix the unit on the concrete pad. The conduit entry to the unit is also shown.

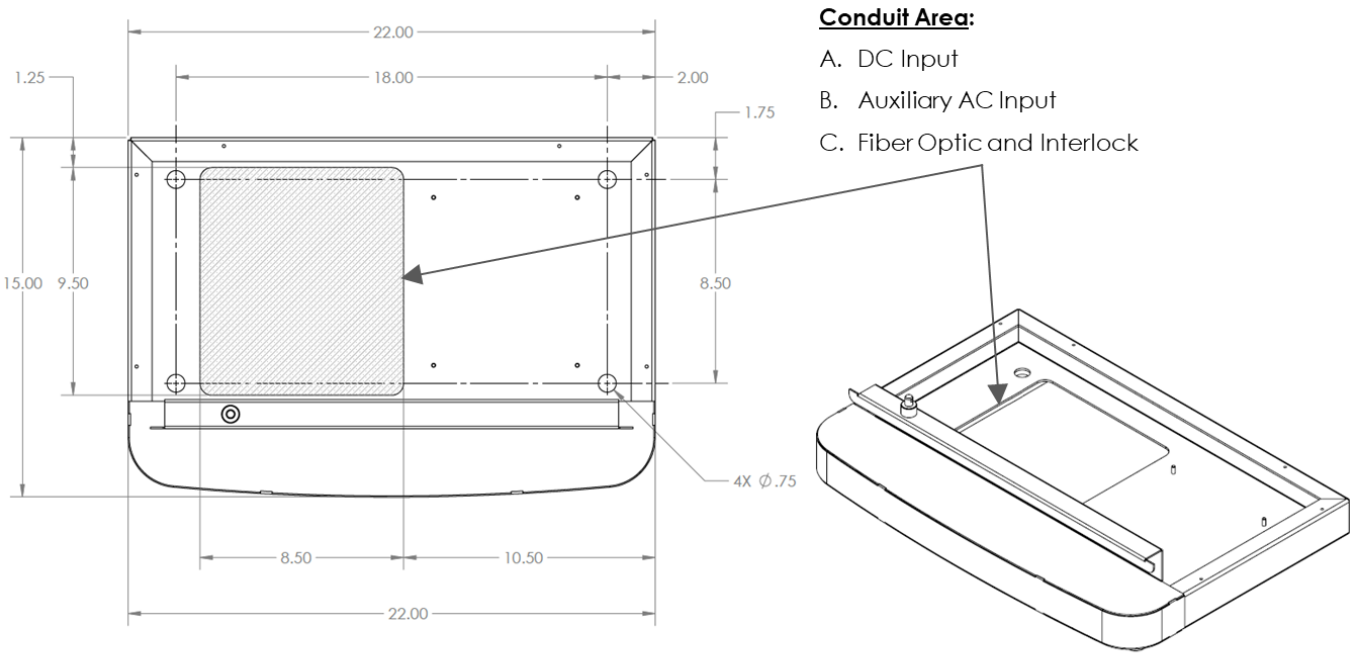

INSTALLATION FOOTER VIEW ISOMETRIC VIEW

Base foundation template for alignment and hole location is available in .step or .dxf files upon request.

NOTE

The bottom of the dispenser needs to be sealed to the ground.

7.3. Electrical and Communication Service Connection

1-Tower, 1-Dispenser (350 A) Configuration System

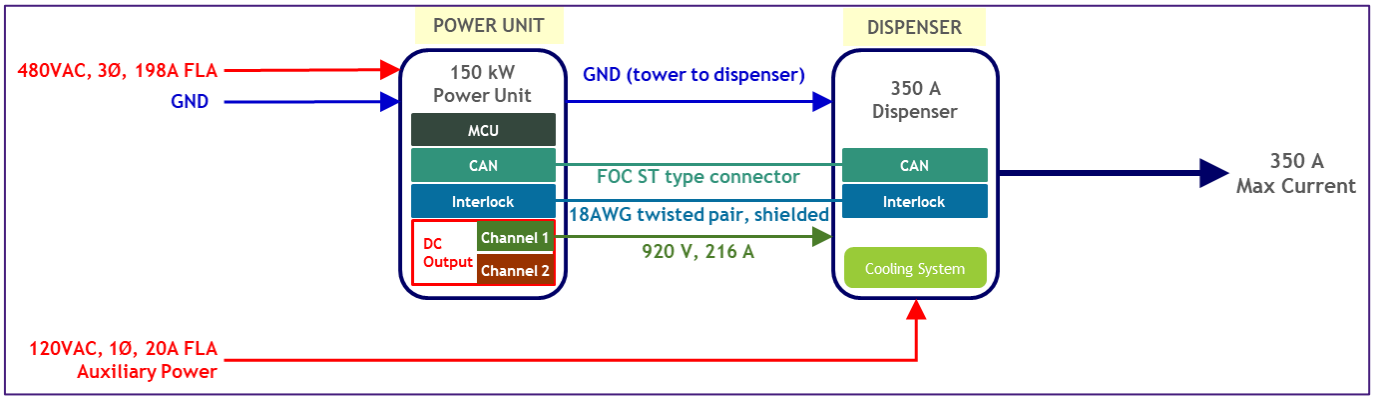

1-Tower, 2-Dispenser (350 A) Configuration System

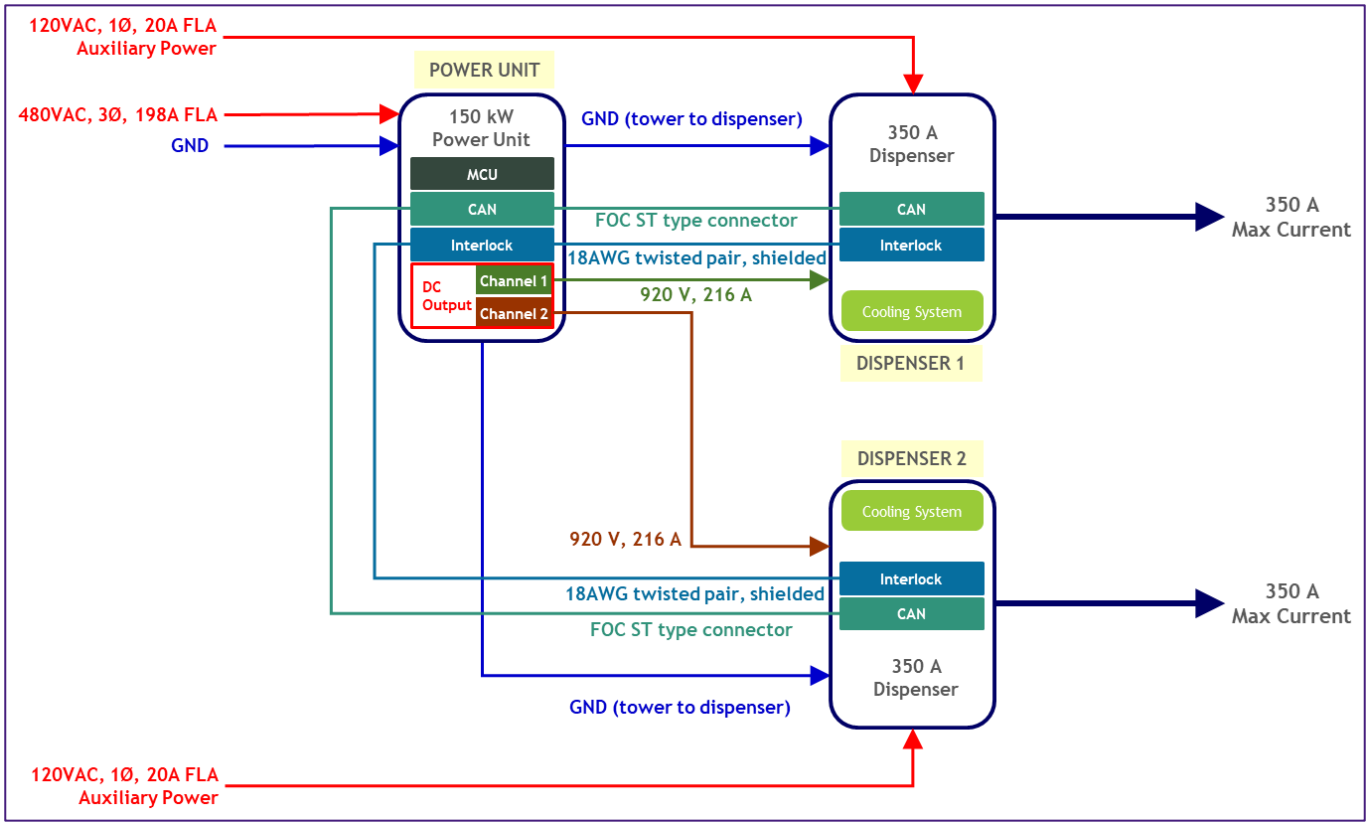

1-Power Unit/Tower, 1-Dispenser (200A) Configuration System

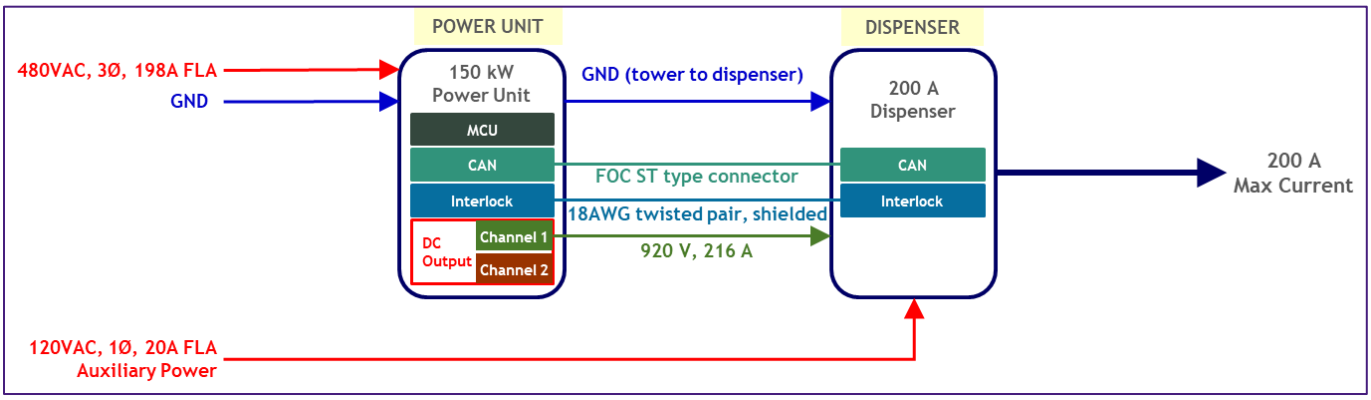

1-Power Unit/Tower, 2-Dispenser (200A) Configuration System

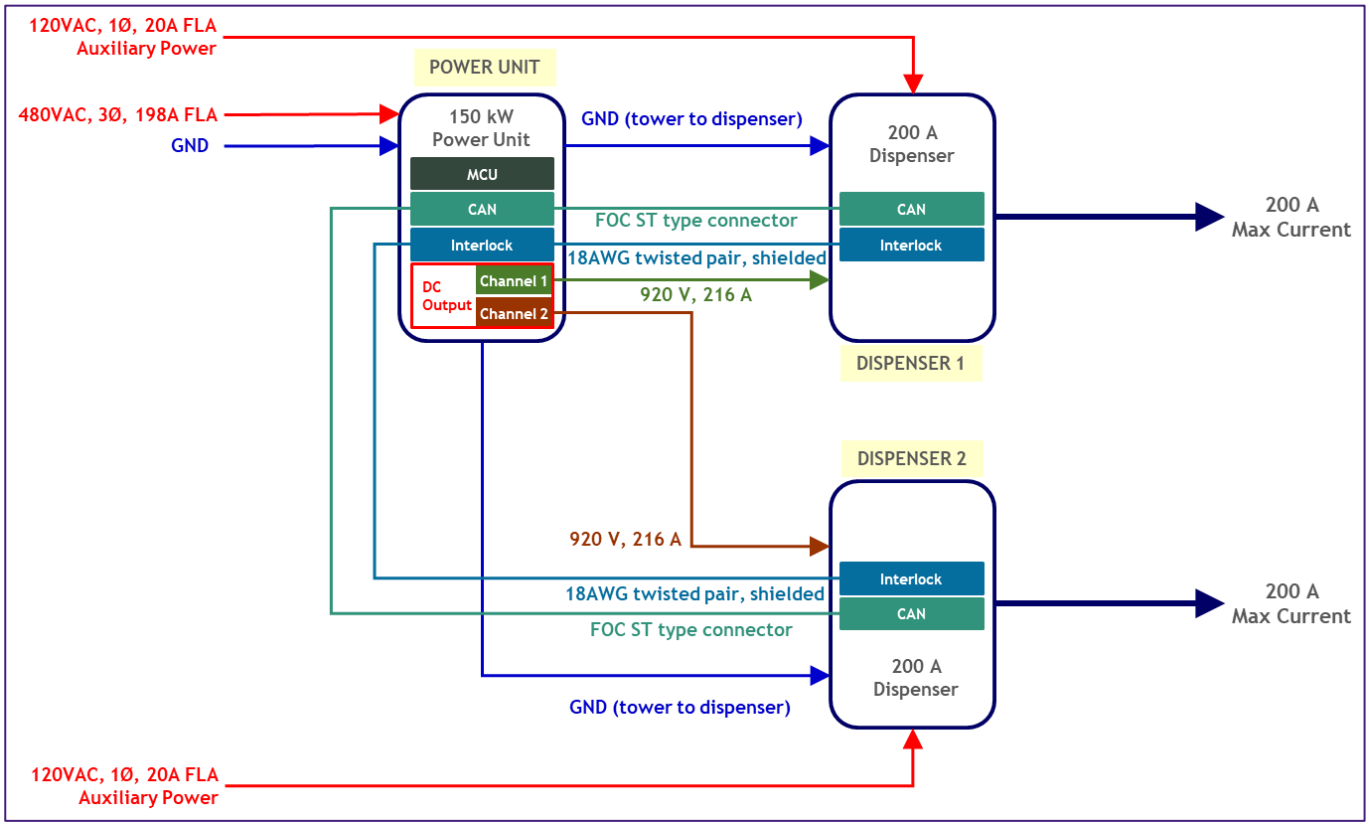

Power Unit / Tower Requirements

- AC Input: 480 VAC, 3-Phase, 198 Amps FLA (Full Load Amps)
- DC Output (to Dispenser): 1,000 V
  - Channel A: Use this channel for Single Dispenser or 1st Dispenser
  - Channel B: Use this channel for the 2nd Dispenser
- Communication conduit between the tower and the dispenser
  - FOC (Fiber Optic Connection):
    - OM3, multimode, 50/125µm, ST connectors on both ends
    - 2 pairs of Fiber Optic Cables (1 pair as spare since these easily break)
  - Interlock Connection:
    - 18 AWG twisted pair, shielded interlock cable
  - Ethernet / LAN Connection

Dispenser Requirements

- AC Input: 120 VAC, Single Phase, 20 Amps FLA (Full Load Amps)
  - Auxiliary power to power the heat exchanger, payment system, and display module.
- DC Input (from Tower): 1,000 V
- Communication conduit between the tower and the dispenser
  - Fiber Optic Connection from tower (2 pairs per dispenser with 1 as spare)
  - Interlock Connection from tower (1 pair per dispenser)
  - Ethernet / LAN Connection
- **MUST** have a common direct ground with the Power Unit / Tower

Grounding Instructions

DANGER

Improper connection of the equipment-grounding conductor may result in a risk of electric shock. Check with a qualified electrical personnel or service person if you are in doubt as to whether the unit is properly grounded.

The **JuicePump 150** must be connected to a grounded, metal, permanent wiring system, or an equipment-grounding conductor is to be run with the circuit conductors and connected to the equipment grounding terminal. Connections to the charger shall comply with all applicable electrical codes and ordinances.

TOWER AC Input – Input Terminal Lug

Terminal Lug P/N	Opening per Pole	Wire Range	Torque Requirement
600L2	1	600kcmil – 2AWG (copper or aluminum)	550 in-lb

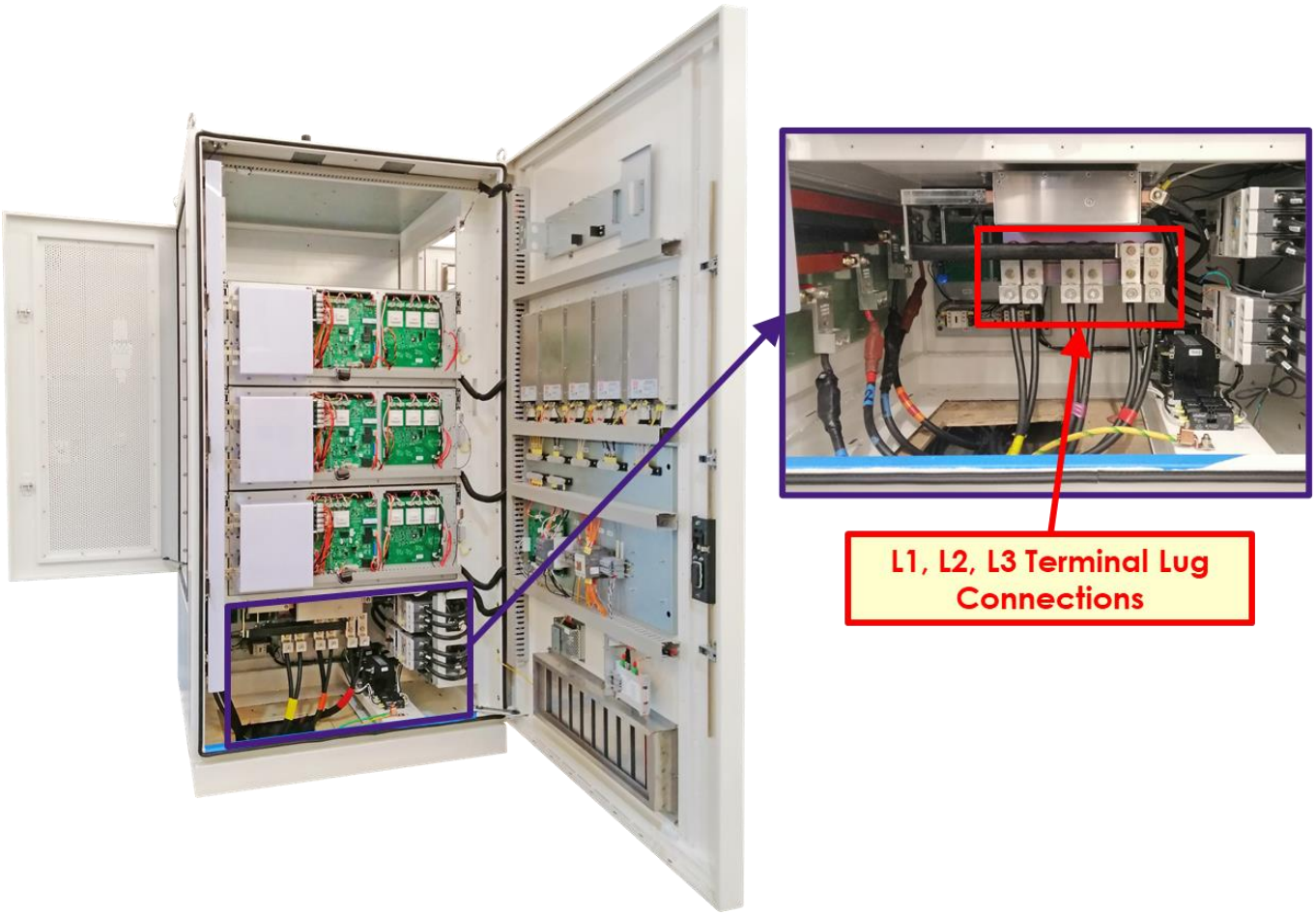

NOTE

The system is not phase rotation sensitive, thus there is no concern over the phasing of the termination of the AC Lines.

DC Converter – Output Terminal Lug (from Converter to Dispenser)

- Single or Dual High Output Configuration

Terminal Lug P/N	Opening per Pole	Wire Range	Torque Requirement
2-350L2	2	350kcmil – 6AWG (copper or aluminum)	375 in-lb

NOTE

Wire should be 1,000V rated (minimum) and suitable for 500A.

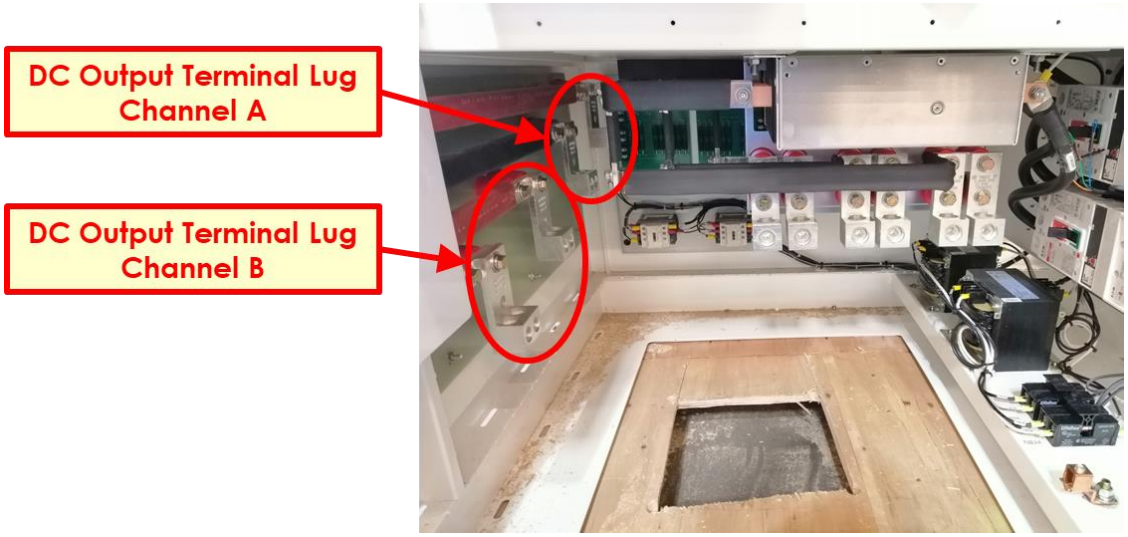

NOTE

- **Channel A: Use this channel for Single Dispenser or 1st Dispenser**
- **Channel B: Use this channel for the 2nd Dispenser**

350 kW Dispenser DC Input Terminal Lug

Terminal Lug P/N	Opening per Pole	Wire Range	Torque Requirement
2-350L2	2	350kcmil – 6AWG (copper or aluminum)	375 in-lb

NOTE

Wire should be 1,000V rated (minimum) and suitable for 500A

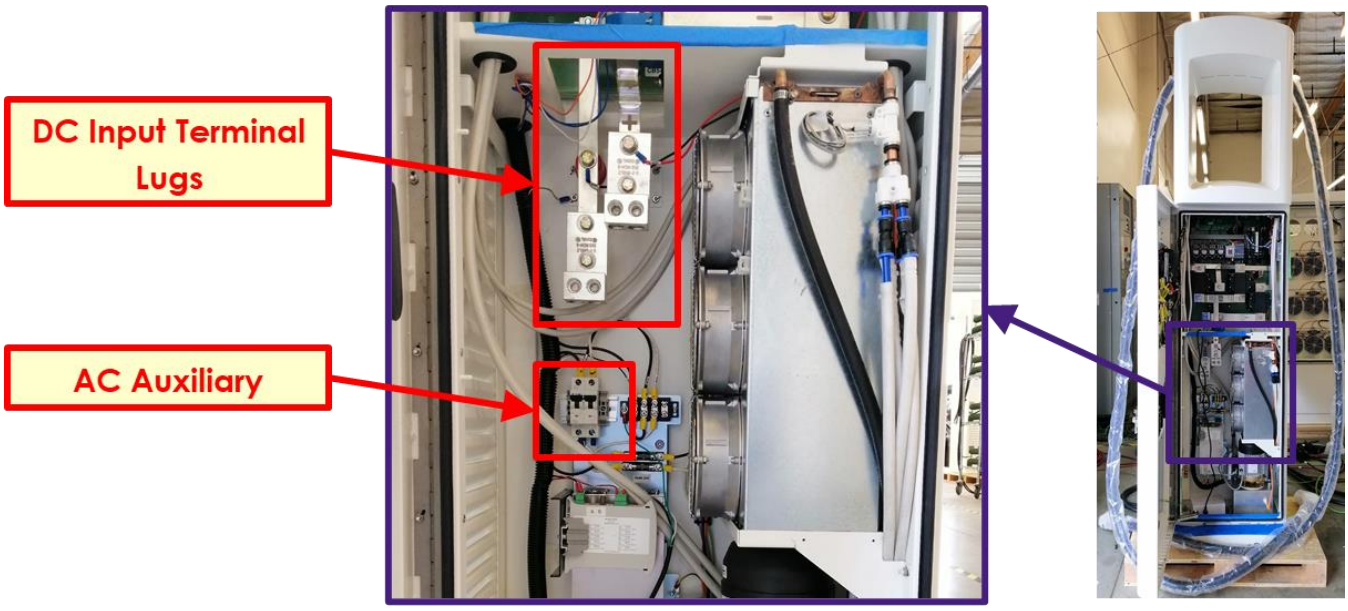

Dispenser **Terminal Block & Circuit Breaker**

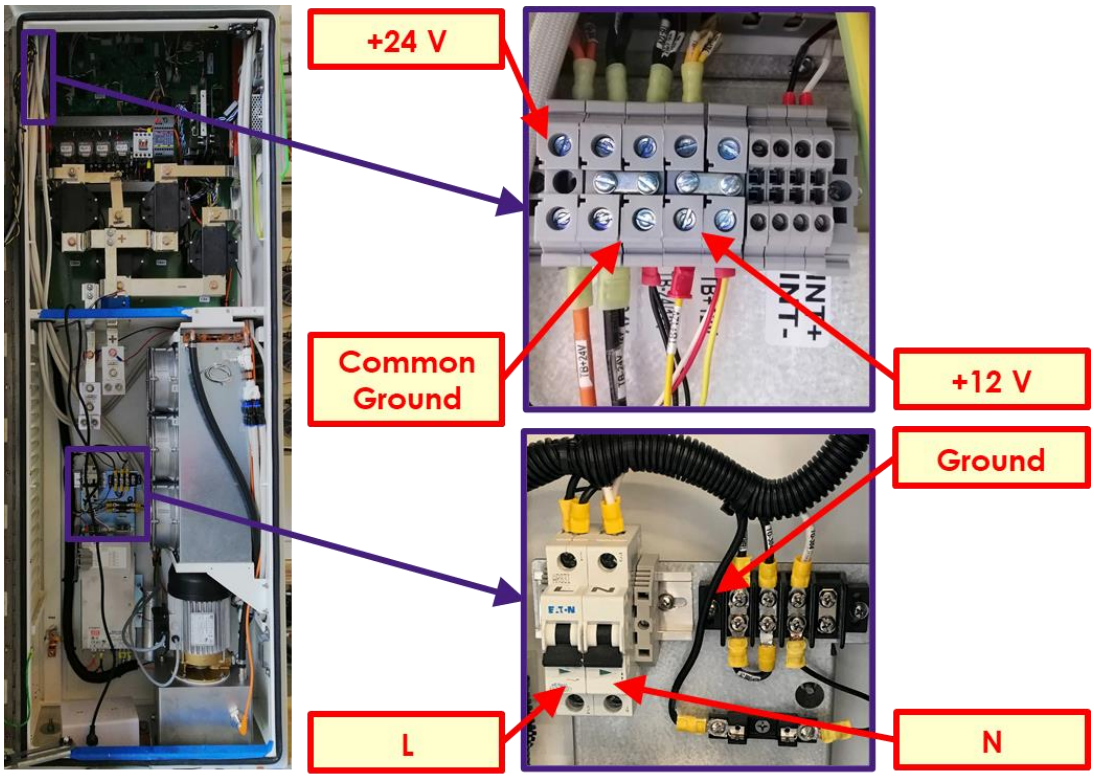

Dispenser Ground – Must have a common direct ground with the Power Unit / Tower

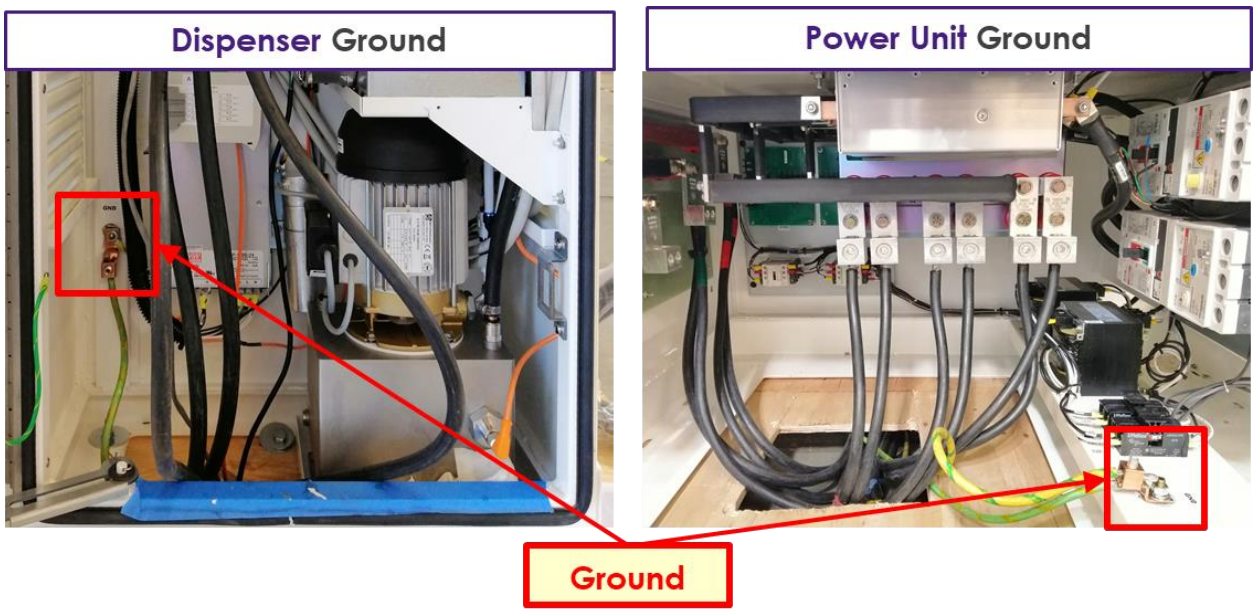

Tower / Power Unit – Interlock and Fiber Optic Cable Connection

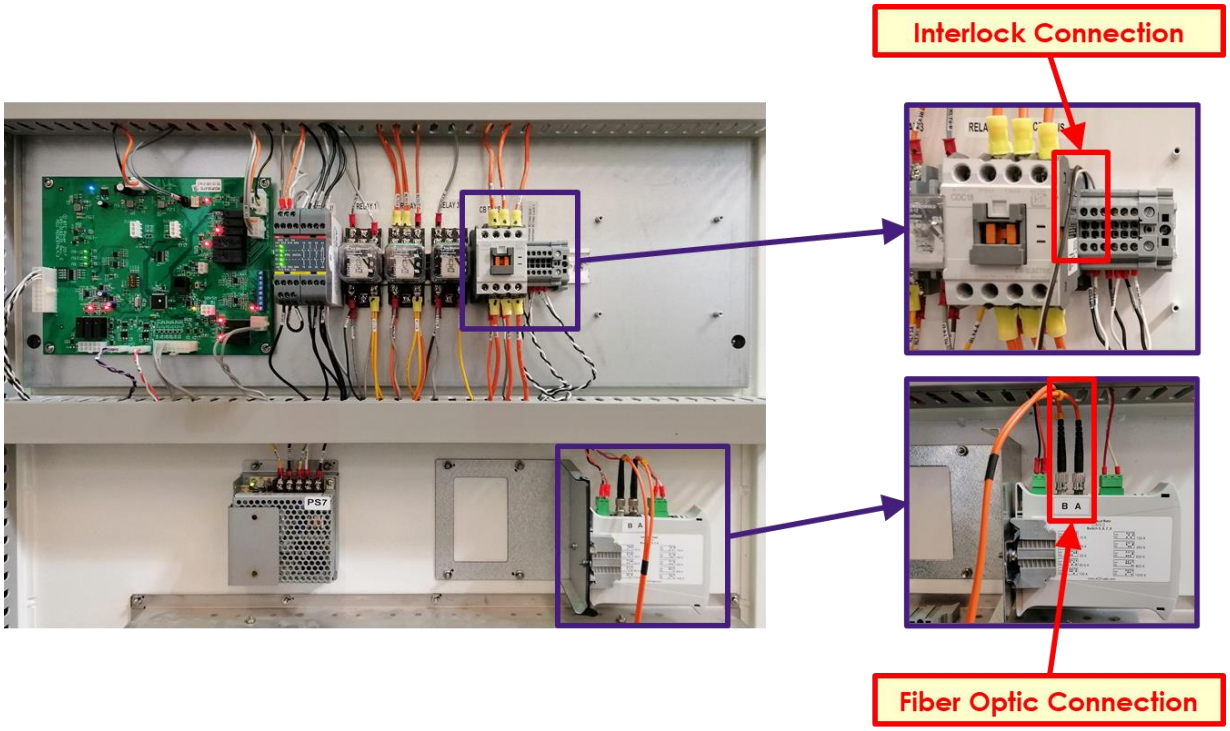

Dispenser – Interlock and Fiber Optic Cable Connection

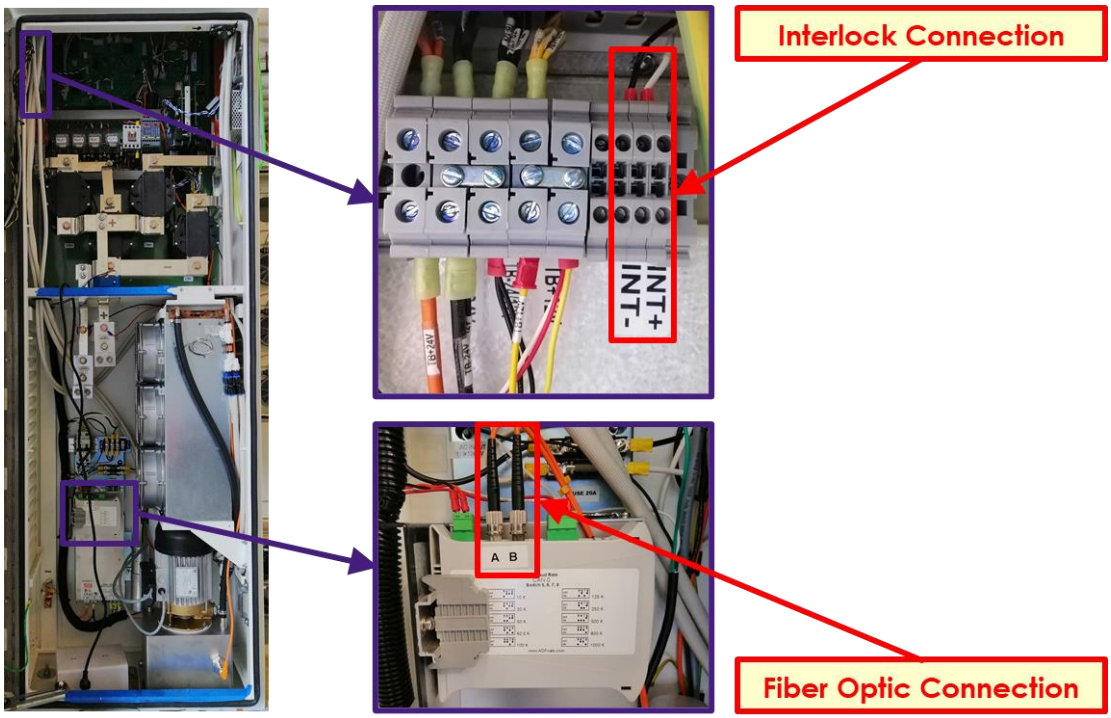

7.4. Ethernet Port Location

The PC is located behind the display back cover.

1. To access the PC, remove the display back cover first located at the back of the dispenser door.
2. To remove back cover, remove four (4) fan connectors, and then remove zip ties.

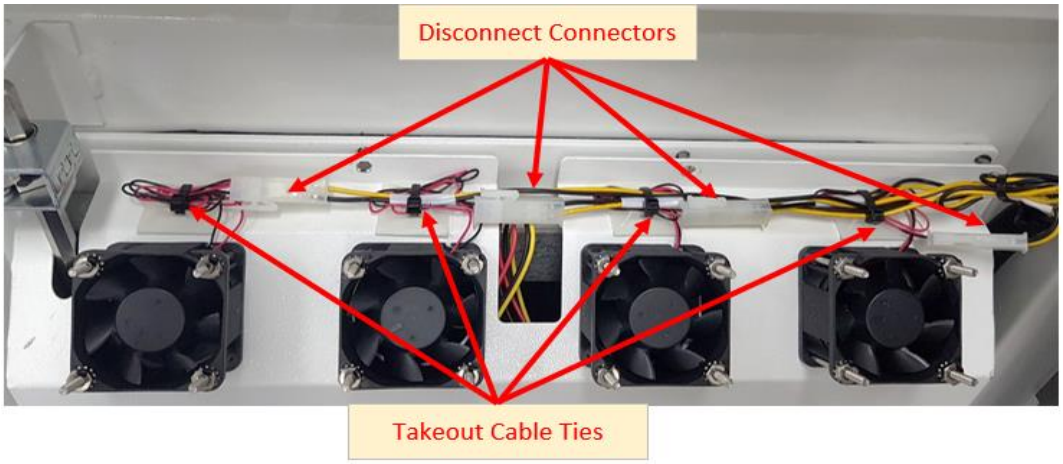

3. Remove twelve (12) kep nuts with an11/32" socket (circled in red.) **NOTE: Do not remove the nuts circled in yellow**.

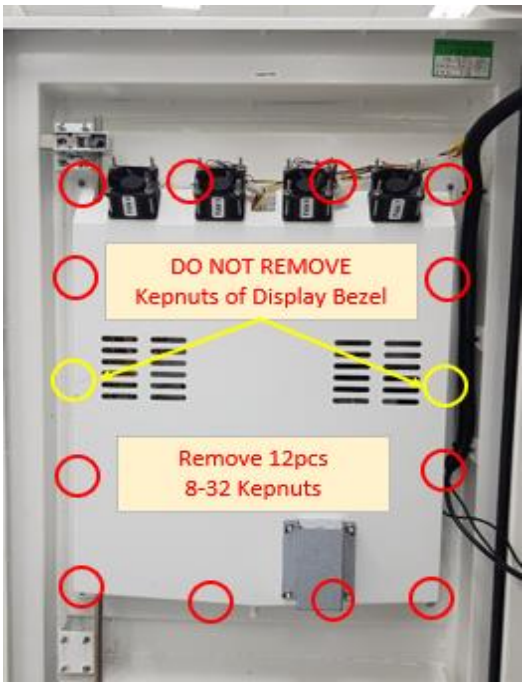

4. The RJ45 cable from the modem should be connected to the left-side ethernet port of the PC.

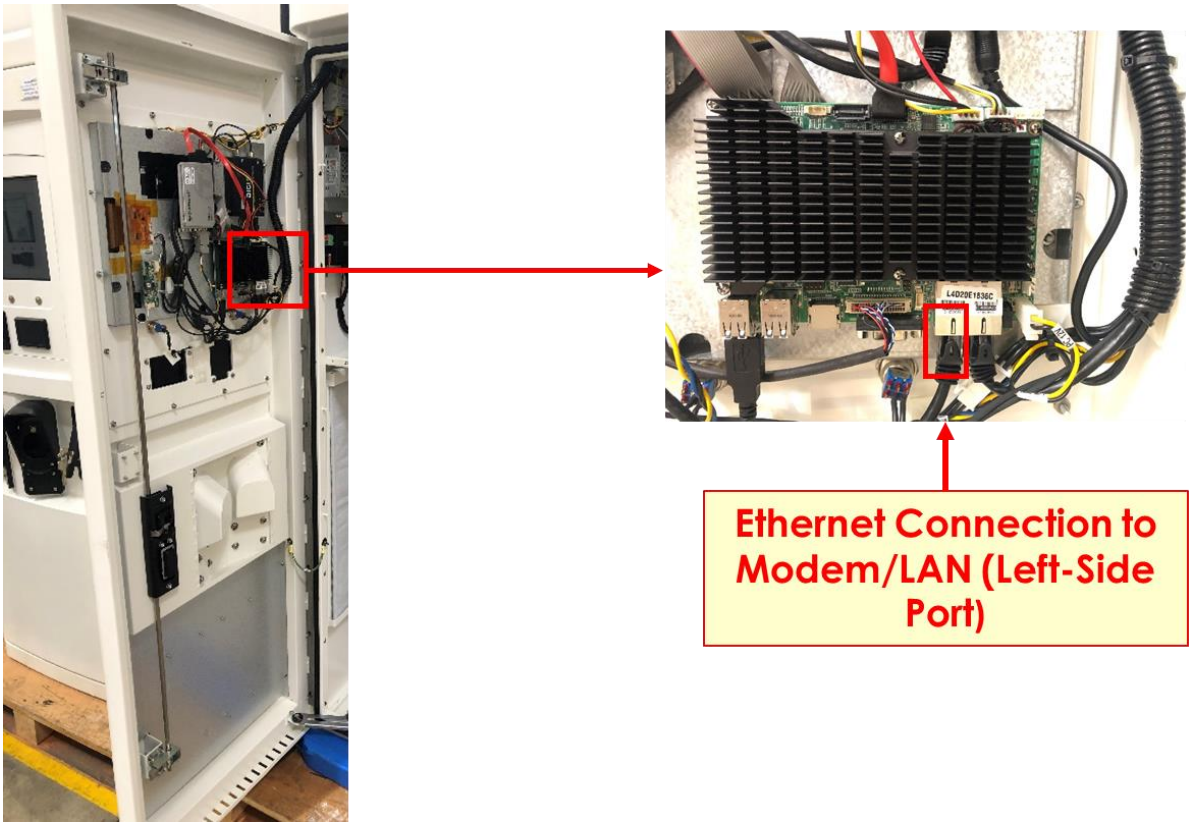

8. Verification and Inspection

Commissioning

Prior and during system start-up, perform verification and inspection on both tower and dispenser/s using the **HPDC Charger Commissioning Checklist** which was provided together with this manual.

All instructions listed in the commissioning checklist are considered mandatory and must be carried out by the contractor in-charge of the commissioning. Required information and actual measured data shall be filled-in as well.

For any issues, concerns, or questions during commissioning, please email to dispatch@enelX.com or call **1-855-901-1558**.

After successful commissioning, email the completed commissioning checklist to dispatch@enelX.com.

9. Operation

9.1. System Power Up

DANGER

The charger must NOT be started or put into use without having been commissioned by a fully trained and authorized personnel.

- **SWITCH ON** the circuit breaker inside the Dispenser as shown below.

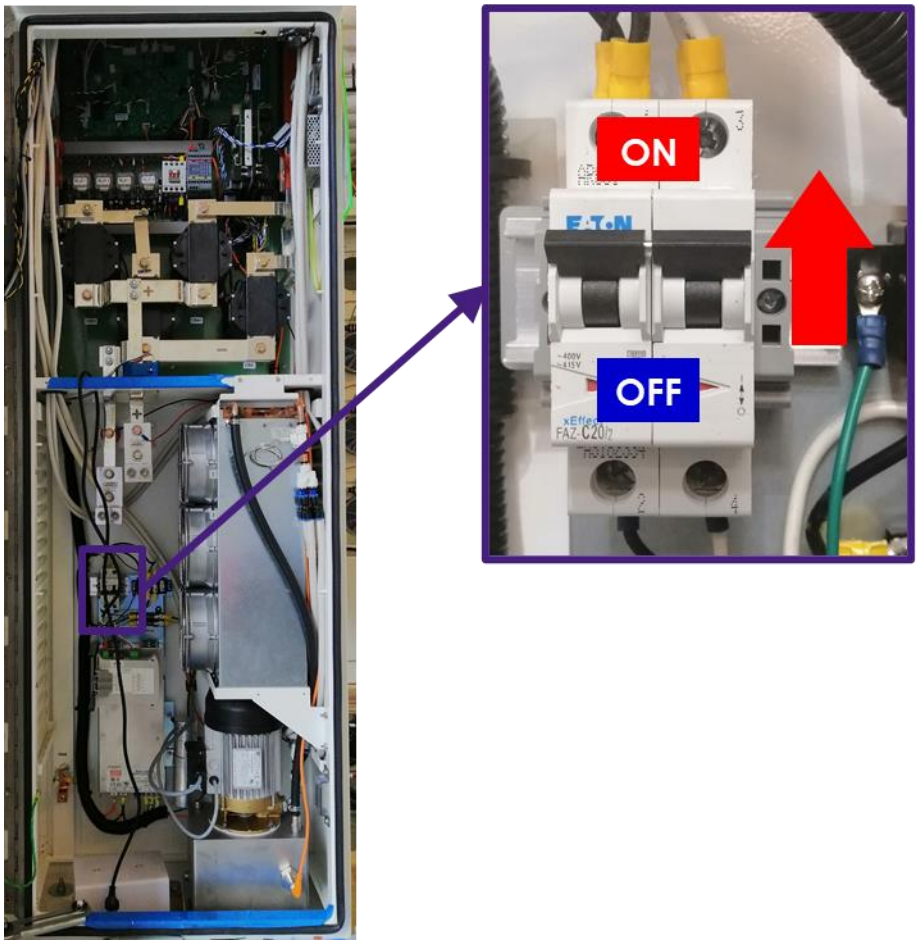

- Then, **SWITCH ON** the Main Panel Breaker.

9.2. Output Connectors

DANGER

Danger of death, serious personal injury and burns. Improper handling of the charging cable can cause electric shock and short circuits.

9.2.1. CHAdeMO Connector (200 A)

- **Cable Length : 10.5 ft**
- **Connector Weight : approximate 3.97 lbs.**

9.2.2. CCS1 Connector (500 A)

- **Cable Length : 11.15 ft, 13.15 ft (for models with connectors rotated 60° left/right), 25 ft**
- **Connector Weight : approximate 2.43 lbs.**

9.2.3. CCS1 Connector (200 A)

- **Cable Length : 13 ft**

9.3. Operating Instruction

CAUTION

If, at any time, you feel the equipment to be unsafe, shut off the electricity at the Circuit Breaker and immediately contact Customer Support. DO NOT use your charger until the problem can be identified and corrected.

Starting a Charging Session

SCREEN	DESCRIPTION
SCREEN 1	
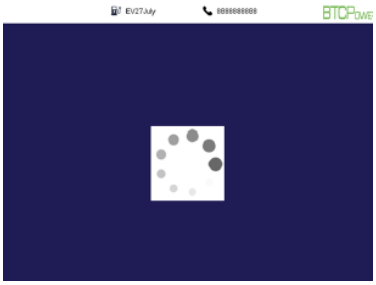	STARTUP SCREEN
SCREEN 1.2	
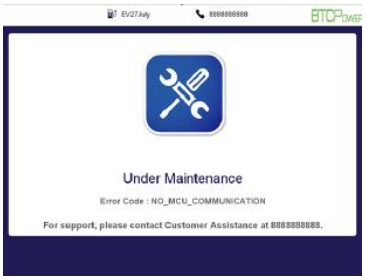	If startup fails, "Under Maintenance" screen will show up.
SCREEN 2	
	WELCOME SCREEN Displays Connector Options Select: CHAdeMO CCS Combo

Starting a **Charging Session** (continued)

SCREEN	DESCRIPTION
SCREEN 3	
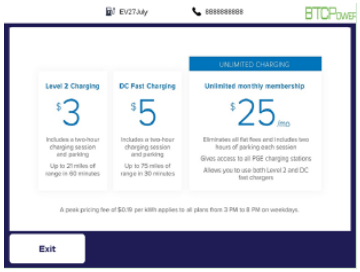	Displays Pricing Details
SCREEN 4	
	Displays Payment Options **Credit Card, RFID Card** Tap RFID Card to Proceed
SCREEN 5	
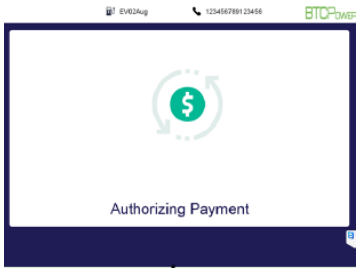 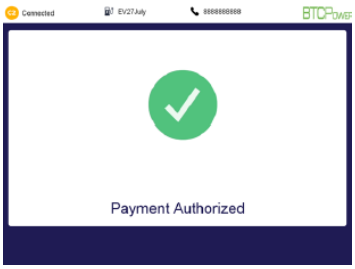	Authorizing Payment
SCREEN 5.1	
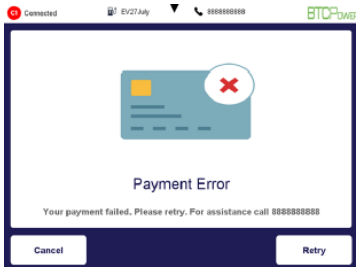	If payment fails, "Payment Error" will show up.

Starting a **Charging Session** (continued)

SCREEN	DESCRIPTION
SCREEN 6	
	Connector Plug In
SCREEN 7	
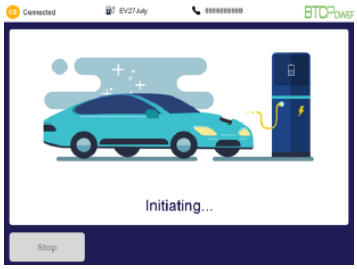	Charging Initialization
SCREEN 8	
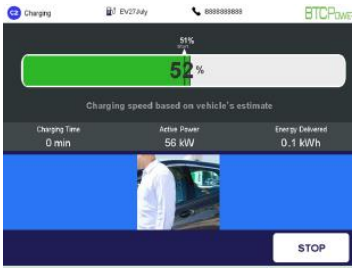	Charging in Progress and Displays Charging Information Press "STOP" to Discontinue Charging

Starting a **Charging Session** (continued)

SCREEN	DESCRIPTION
SCREEN 9	
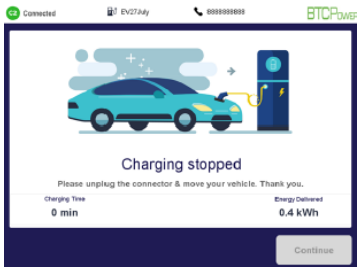	**Charging Stopped / Completed**
SCREEN 10	
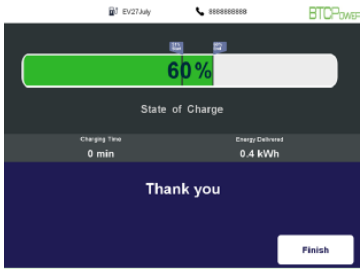	**End of Charging** **Unplug Connector and Return to Holder**

9.4. Troubleshooting

Error Codes

ERROR CODE	ERROR SOURCE	LEVEL	DESCRIPTION	ACTION
SECC_OFFLINE	Dispenser	1 High	SECC board is not communicating with charger.	- Contact ENEL X for assistance - Attempt to connect via ethernet - Reflash SECC board(s) if possible - If SECC reflash does not correct issue, reboot MCU - Technician may be dispatched if issue cannot be solved remotely
CHARGER_ENGINE_OFFLINE	Dispenser	1 High	Power cabinets are not communicating with Dispenser	- Review logs for error history - If issue is persistent, contact ENEL X for further assistance - Technician may be dispatched if issue cannot be solved remotely
DISPENSER_TYPE_MISMATCH	Dispenser	1 High	Firmware and application configuration mismatch	- Contact ENEL X for assistance - Check if error is persistent. If persistent, dial into system, and reconfigure Payment App and MCU correctly with proper firmware and settings.
LEVEL_SENSOR_FAILURE	Dispenser	1 High	Level of cooling fluid is less than required, or Level sensor failure	- Review logs for error history - If issue is persistent, contact ENEL X for further assistance - Technician may be dispatched if issue cannot be solved remotely
NO_MCU_COMMUNICATION	Dispenser	1 High	Payment application is not able to communicate with controller	- Contact ENEL X for assistance - Attempt to reflash code - Dispatch technician if reflashing does not resolve issue
DISPENSER_SAFETY_ERROR	Dispenser	2 High (if in faulted state) /medium (if reason for shutdown)	Dispenser Door is open, or safety on dispenser is lost	- Review logs for error history - If issue is persistent, contact ENEL X for further assistance - Technician may be dispatched if issue cannot be solved remotely
CUBE_OFFLINE_FAILURE	Dispenser	2 High (if in faulted state) / medium (if reason for shutdown)	Dispenser is not able to communicate with Power Module in the power cabinet tower.	No action required
TOWER_SAFETY_ERROR	Tower	2 High (if in faulted state) / medium (if reason for shutdown)	Tower Door is open, or safety in the Tower is lost	- Review logs for error history - If issue is persistent, contact ENEL X for further assistance - Technician may be dispatched if issue cannot be solved remotely

ERROR CODE	ERROR SOURCE	LEVEL	DESCRIPTION	ACTION
CHARGER_DOOR_OPEN	Dispenser	2 High (if in faulted state) / medium (if reason for shutdown)	Charger door open is detected	- Review logs for error history - If issue is persistent, contact ENEL X for further assistance - Technician may be dispatched if issue cannot be solved remotely
DISPENSER_INTERMITTENT_SAFETY_ERROR	Dispenser	3 Medium/if frequent, High	Dispenser safety is getting removed, which is causing reset on the MCU	- Review logs for error history - If issue is persistent, contact ENEL X for further assistance - Technician may be dispatched if issue cannot be solved remotely
CHARGER_OVERVOLTAGE_ERROR	Dispenser	4 Medium	Over voltage fault detected on power module by Dispenser. Can be caused due to opening contactors by vehicle or charger in emergency shutdown situations.	- Check calibration via TeamViewer - Check settings
CHARGER_OVERCURRENT_ERROR	Dispenser	4 Medium	Charger over current fault detected on power module	- Check calibration via TeamViewer - Check settings
TOWER_INTERMITTENT_SAFETY_ERROR	Tower	4 Medium	Tower Safety is getting removed, which is causing charge session to drop to 0A and stay in that state.	- Review logs for error history - If issue is persistent, contact ENEL X for further assistance - Technician may be dispatched if issue cannot be solved remotely
DISP_ISO_CIRCUIT_FAIL	Dispenser	4 Medium	Charge session failed due to ISO detect	No action needed
OFFSET_VOLTAGE_ IDLE_ERR OR	Dispenser	4 Medium	Charger detects voltage in idle state	- Check calibration via TeamViewer
TOWER_INITIATED_SHUTDOWN	Tower	4 Medium	This error can be generated due to different reasons. Initiating phase: 1. Power module is not able to turn on and unable give ready status. 2. Timeout for vehicle ready signal. Cable Check phase: 1. Cable Check fails because charger is not able to generate requested voltage. 2. Cable check fails because charger bleed register is not able to bleed generated voltage. 3. Timeout for precharge completion. Charging Phase: 1. If vehicle opens contactor and Power module detects it before Dispenser, then it initiates shutdown sequence. 2. Any fault detected on Power Module, which initiates shutdown sequence. i.e., driver error 3. Communication loss detected by power module and initiates shutdown sequence, etc.	- Review logs for error history - Reattempt charging session - If issue is persistent, contact ENEL X for further assistance - Technician may be dispatched if issue cannot be solved remotely
MASTER_CAN_TIMEOUT	Dispenser	4 Medium	Dispenser to Tower - one of the CAN fibers is broken and tower master board is not able to receive any CAN messages from dispenser while charging.	No action required

ERROR CODE	ERROR SOURCE	LEVEL	DESCRIPTION	ACTION
MASTER_PROCESS_TIMEOUT	Dispenser	4 Medium	Master statemachine timeout - need to send to engineering	- Analyze logs and send to ENEL X engineering
MASTER_STATE_MISMATCH	Dispenser	4 Medium	State mismatch between Tower MCU and Dispenser MCU	- Analyze logs and send to ENEL X engineering
COMMUNICATION_FAILED	Vehicle/Dispenser	4 Medium	Multiple conditions can cause this error code. 1. Vehicle is not responding to charger. 2. SLAC failed. 3. Charger is not able to complete initial communication with vehicle. 4. Vehicle not connected properly. 5. Cable connector not making proper contact with vehicle due to weight/length of cable.	- Dial into system and close safety in Dispenser - Recommend to attempt another charging session - If issue is persistent, contact ENEL X for further assistance - Technician may be dispatched if issue cannot be solved remotely
TIMEOUT_POWERMODULE_TURNON	Tower	4 Medium	If any power module is not enabled after start signal	- Analyze logs - ENEL X will issue dispatch instructions
WAITING_ISOLATION_TEST_TIMEOUT	Dispenser	4 Medium	- Charger is not able to complete CableCheck in time - Application side - Tower may not be sending voltage	- Review logs for error history - If issue is persistent, contact ENEL X for further assistance - Technician may be dispatched if issue cannot be solved remotely
INTERLOCK_FAILURE	Tower/Dispenser	4 Medium	Interlock between Tower and Dispenser is lost while charging	No action required
CUBE_ERROR_1	Tower	4 Medium	Power module loses ready signal. Can be caused by overheating.	- Review logs for error history - If issue is persistent, contact ENEL X for further assistance - Technician may be dispatched if issue cannot be solved remotely
CUBE_NOT_READY	Tower	4 Medium	Ready signal on Power Module not present	No action required
CUBE_DERR_ERROR	Tower	4 Medium	Power module detects Driver error (IGBT issue)	- Review logs for error history - If issue is persistent, contact ENEL X for further assistance - Technician may be dispatched if issue cannot be solved remotely
CUBE_INIT_FAILURE	Tower	4 Medium	Power module fails to initialize	- Review logs for error history - Technician may be dispatched if issue cannot be solved remotely
ISOLATIONTEST_TIMEOUT	Dispenser/Vehicle	4 Medium	Power module not able to generate voltage to complete isolation test on charger side	- Check logs - Check power module status
VEHICLE_CHARGE_SYSTEM_ERROR	Vehicle	4 Medium	Vehicle timeout	- Attempt another charge session
PRECHARGE_TIMEOUT	Dispenser	5 Low	Timeout to reach precharge voltage or vehicle contactor close on CCS vehicle	- Check logs and find if precharge voltage was generated or not and then find issue - Check calibration on charger
GET_EVCERT_TIMEOUT	PNC	5 Low	Timeout while waiting for EV certificate in PNC (PlugNCharge)	- Check logs and find issue. - Check certificate on charger

ERROR CODE	ERROR SOURCE	LEVEL	DESCRIPTION	ACTION
GET_EVCERT_DECLINE	PNC	5 Low	Decline of EV certificate by server in PNC (PlugNCharge)	- Check logs and find issue. - Check certificate on charger
PNC_AUTH_NOTAPPROVED	Server	5 Low	PNC (PlugNCharge) authorization message declined by server	- Check logs and find issue. - Check certificate on charger
TIMEOUT_VEHICLE_EV_CONTACTOR_CLOSE	Vehicle	5 Low	This is timeout after Cable Check is completed. For CHAdeMO vehicle, it should close the contactor in 4 seconds after D2 signal raised by charger.	- Note vehicle model - Recommend customer to attempt charging again - Monitor vehicle types and frequency of error - If issue is persistent, contact ENEL X for further assistance - Technician may be dispatched if issue cannot be solved remotely
TIMEOUT_VEHICLE_EV_CONTACTOR_OPEN	Dispenser/Vehicle	5 Low	In shutdown sequence, if present voltage is not dropped below 20V in 4 seconds, then charger triggers this error. This is not reason for shutdown.	No action required
TIMEOUT_CHARGING_CURRENT_REQUEST	Vehicle	5 Low	After vehicle contactor is closed, vehicle should send current command request in 4 seconds.	- Note vehicle model - Recommend customer to attempt charging again - Monitor vehicle types and frequency of error - If issue is persistent, contact ENEL X for further assistance - Technician may be dispatched if issue cannot be solved remotely
TOWER_NOPOWER_AVAILABLE	Tower	5 Low	All power modules are either occupied or in faulted state, so the Tower cannot assign any power for charge session.	- Check tower status and fault on charger
CUBE_OVERVOLTAGE_ERROR	Tower	5 Low	Power module detects over voltage error	- Review logs for error history - If issue is persistent, contact ENEL X for further assistance - Technician may be dispatched if issue cannot be solved remotely
WAITING_CHARGING_PERMISSION_TIMEOUT	Dispenser/Vehicle	4 Medium	If charger does not receive permission from vehicle to start session before timeout.	- Note vehicle model - Recommend customer to attempt charging again - Monitor vehicle types and frequency of error - If issue is persistent, contact ENEL X for further assistance - Technician may be dispatched if issue cannot be solved remotely

ERROR CODE	ERROR SOURCE	LEVEL	DESCRIPTION	ACTION
VEHICLE_JINSIGNAL_REMOVED	Vehicle	4 Medium	In shutdown sequence, if vehicle will not remove JIN signal in time, then charger sends this error. This is not the reason which caused charging session shutdown. This is while completing shutdown sequence. (CHAdeMO issue)	- Note vehicle model - Recommend customer to attempt charging again - Monitor vehicle types and frequency of error - If issue is persistent, contact ENEL X for further assistance - Technician may be dispatched if issue cannot be solved remotely
PROXIMITY_ERROR1	Vehicle	5 Low	Timeout of vehicle communication. For CHAdeMO, it is 6 seconds after D1 signal turned on. For CCS, we will not receive parameter discovery in 30 seconds (changed from 10 seconds to 30 seconds for Etron).	- Note vehicle model - Recommend customer to attempt charging again - Monitor vehicle types and frequency of error - Check logs on SECC Board via PUTTY - If issue is persistent, contact ENEL X for further assistance - Technician may be dispatched if issue cannot be solved remotely
PROXIMITY_ERROR2	Vehicle	5 Low	For CHAdeMO vehicle, after initial communication, the vehicle should send "vehicle ready flag" which is ChargeEnable flag. JINSignal should be raised in 8 seconds from D1 signal enabled.	- Note vehicle model - Customer needs to make sure vehicle is plugged in correctly, turned off and in park state. - Recommend removing charger, then power cycling car (turning off then on again), and finally re-attempting charging session - If issue persists, contact ENEL X for further assistance
APP_VEHICLE_RESPONSE_TIMEOUT	Vehicle	5 Low	Vehicle did not respond to initial handshaking	if frequent then. - Check configuration and calibration of board - Check certificates on SECC
VEHICLE_TIMEOUT	Vehicle	5 Low	Vehicle timeout in contact authentication loop. Mostly when customer takes more time to pay or if vehicle needs time between 2 attempts.	- Have customer reattempt charging session - If error persists, contact ENEL X - Connect to system remotely and execute ping using PUTTY - Check firmware version of SECC Board
CHARGER_NOTCOMPATIBLE	Dispenser	5 Low	Vehicle is not compatible with charger.	No action required

ERROR CODE	ERROR SOURCE	LEVEL	DESCRIPTION	ACTION
VEHICLE_BATTERY_TEMP_INHIBIT	Vehicle	5 Low	Vehicle battery voltage is greater than threshold.	No action required
VEHICLE_SHIFT_POSITION	Vehicle	5 Low	Vehicle is not in park state.	No action required
VEHICLE_CONNECTOR_LOCK_FAULT	Vehicle	5 Low	Vehicle is not able to lock connector.	No action required
VEHICLE_CHARGING_CURRENT_DIFFERENTIAL	Vehicle/Dispenser	5 Low	Vehicle issue or charger calibration	- Review logs for error history - If issue is persistent, contact ENEL X for further assistance - Technician may be dispatched if issue cannot be solved remotely
VEHICLE_CHARGING_VOLTAGE_RANGE_ERROR	Vehicle/Dispenser	5 Low	Vehicle issue or charger calibration	- Review logs for error history - If issue is persistent, contact ENEL X for further assistance - Technician may be dispatched if issue cannot be solved remotely
VEHICLE_CHARGING_SYSTEM_INCOMPATIBILITY	Vehicle	5 Low	Charger compatibility error	No action required
VEHICLE_NO_DATA_ERROR	Vehicle	5 Low	No charge parameters from vehicle	No action required
VEHICLE_CHARGER_INTERNAL_ERROR	Vehicle	5 Low	Vehicle internal error	No action required
VEHICLE_PILOT_FAILURE	Vehicle	5 Low	CCS vehicle pilot signal changed from StateC to StateB. Pilot signal failure.	- Note vehicle model - May need to adjust CCS cable while plugged in to make proper contact with vehicle socket (prevalent in Chevrolet Bolt) - If issue is persistent, contact ENEL X for further assistance.
VEHICLE_PROXCAN_TIMEOUT	Vehicle	5 Low	Communication lost in between session	- Check logs and find issue
VEHICLE_PROTOCOL_MISMATCH_ERROR	Vehicle	5 Low	Vehicle protocol number is not supported on charger	No action required
AUTH_NOT_APPROVED	Payment terminal / User	5 Low	Other payment failed (Non-Nayax and NFC)	- Recommend to try payment again. If second try does not work, try with another payment method. - If issue is persistent, contact ENEL X for further assistance. - Technician may be dispatched if issue cannot be solved remotely.
NFC_AUTH_NOTAPPROVED	Payment terminal / User	5 Low	NFC Payment failed. Only UIC reader	- Recommend to try payment again. If second try does not work, try with another payment method - If issue is persistent, contact ENEL X for further assistance - Technician may be dispatched if issue cannot be solved remotely.

ERROR CODE	ERROR SOURCE	LEVEL	DESCRIPTION	ACTION
POS_AUTH_NOTAPPROVED	Payment terminal / User	5 Low	Nayax device payment not approved.	- Recommend to try payment again. If second try does not work, try with another payment method - Nayax: Confirm correct firmware and UI version on the device - If issue is persistent, contact ENEL X for further assistance - Technician may be dispatched if issue cannot be solved remotely
PAYMENTAPP_COMM_FAILURE	Dispenser	5 Low	Communication between payment application and MCU lost during session	No action required
PAYMENT_AUTH_REJECTED	Server	5 Low	Server rejected payment authorization request.	No action required
APP_PAYMENT_SCREEN_TIMEOUT	Application	6 Info	No payment presented on payment screen	No action required
APP_OTHER_CONNECTOR_OCCUPIED	Application/Dispenser	6 Info	Charging in session in another connector. Charging system can only use one connector at a time.	No action required
ERROR_CODE_XX	Tower/Dispenser	6 Info	Future reference.	No action required
STOPBUTTON_PRESSED	User	6 Info	Customer pressed stop button	No action required
BATTERY_FULL	Dispenser	6 Info	100% SOC on vehicle	No action required
MAX_CHARGING_TIME_COMPLETED	Dispenser	6 Info	If maximum charging time is enabled on the charger, the session shutdown was due to this time limit.	No action required
MAX_SOC_LIMIT	Dispenser	6 Info	If charger has an SOC limit enabled, the session shutdown was due to the set limit.	No action required
USER_STOP_SCREEN	User	6 Info	User pressed stop button on screen	No action required
USER_STOP_BUTTON	User	6 Info	User pressed hardware stop button	No action required
SERVER_SOFT_RESET	Server	6 Info	Server resetting charger payment application.	No action required
SERVER_HARD_RESET	Server	6 Info	Server resetting charger payment controller (PC).	No action required
SERVER_SET_UNAVAILABLE	Server	6 Info	Server set unavailable for connector or for complete charger. Usually thrown when the charger taken offline for servicing on a ticket.	No action required
APP_MAX_CHARGING_TIME	Dispenser	6 Info	If Max charging time enabled and charger reach to max limit.	No action required
TIMEOUT_XX	Tower/Dispenser	6 Info		No action required
USER_STOP_REMOTE	User/server	6 Info	Charging session stopped by user using mobile application or server.	No action required
USER_PAYMENT_CANCEL	User	6 Info	User pressed CANCEL button on present payment screen before pay.	No action required
USER_PRICE_CANCEL	User	6 Info	User pressed cancel button on show price screen.	No action required
UNKNOWN	Payment App	6 Info	Only happens on startup, should clear when system is on. No action required.	No action required

ERROR CODE	ERROR SOURCE	LEVEL	DESCRIPTION	ACTION
OVER_TEMPCORD_J20	Dispenser	4 Medium	Cord Temperature on J20 sensor is higher than threshold	- Review logs for error history - If issue is persistent, contact ENEL X for further assistance - Technician may be dispatched if issue cannot be solved remotely
OVER_TEMPCORD_J22	Dispenser	4 Medium	Cord Temperature on J22 sensor is higher than threshold	
OVER_TEMPCORD_J24	Dispenser	4 Medium	Cord Temperature on J24 sensor is higher than threshold	
OVER_TEMPCORD_J26	Dispenser	4 Medium	Cord Temperature on J26 sensor is higher than threshold	
OVER_TEMPCORD_J23	Dispenser	4 Medium	Cord Temperature on J23 sensor is higher than threshold. (MCU 5.1 Board only)	
OVER_TEMPCORD_J21	Dispenser	4 Medium	Cord Temperature on J21 sensor is higher than threshold. (MCU 5.1 Board only)	
OVER_TEMPCORD_J27	Dispenser	4 Medium	Cord Temperature on J27 sensor is higher than threshold. (MCU 5.1 Board only)	
OVER_TEMPCORD_J25	Dispenser	4 Medium	Cord Temperature on J25 sensor is higher than threshold. (MCU 5.1 Board only)	

10. Maintenance

DANGER

All servicing must be performed ONLY by qualified personnel. Do not attempt to service the JuicePump 150 Charger yourself.

Make sure to turn off the power to the charger before performing any maintenance activity.

Maintenance Precautions

Each of the capacitors in this device have a high voltage for a time after shutting off the input power supply. Must allow five (5) minutes after powering down before servicing internal components.

Maintenance Items

Perform periodic maintenance of both Power Unit / Tower and Dispenser units.

Outlined below are the mandatory maintenance works for the **Power Unit / Tower** unit that must be carried out in the prescribed interval.

SCOPE	MAINTENANCE WORK	INTERVAL
External Maintenance	• Check the DC Power Unit / Tower for mechanical damage, corrosion, restriction of IP degree of protection, abnormal odor etc. • Check branding labels and signages are in good and legible condition • Clean using water or neutral pH solution	Annual
Internal Maintenance	• Check door conditions with no gaps around door and gasket • Vacuum clean internal components from dust • Clean and check air intake and exhaust vents for debris and foreign materials • Replace air filters every two (2) years or as necessary • Check if power modules are fully seated • Inspect AC/DC terminations and look for signs of arcing and heat-stress on cables and bussing	Annual

SCOPE	MAINTENANCE WORK	INTERVAL
Internal Maintenance	• Check all signal wiring/cabling for any damage • Check all cables and wires if secured • Tighten all high voltage terminations to its specifications	Annual
Performance Testing	• Measure Phase to Phase and Phase to Ground Voltages on the terminal block at the main AC input Acceptable range: ± 10% of nominal value • Perform Interlock Testing	Annual

Outlined below are the mandatory maintenance works for the **Dispenser** unit that must be carried out in the prescribed interval.

SCOPE	MAINTENANCE WORK	INTERVAL
External Maintenance	• Check the Dispenser for mechanical damage, corrosion, restriction of IP degree of protection, abnormal odor etc. • Check branding labels and signages are in good and legible condition • Clean using water or neutral pH solution • Clean HMI with water only • Clean and check all cables, connectors, and holsters for any damage • Check if cables are mounted properly	Annual
Internal Maintenance	• Check door conditions with no gaps around door and gasket • Vacuum clean internal components from dust • Clean and check air intake and exhaust vents for debris and foreign materials • Replace air filters every two (2) years or as necessary • Check if all accessible connections are secured (by gently pulling the cables/wires) • Check if all boards are firmly mounted and no dangling cables/wires • Check for signs of heating particularly on high current conductors • Tighten all high current connections to its specifications	

SCOPE	MAINTENANCE WORK	INTERVAL

Internal Maintenance	• Check cooling system conditions
	  ○ Check all cooling fittings for leaks
	  ○ Check condenser for any bent or clogged fins
	  ○ Clean cooling fins if needed (extra care not to bend)
	  ○ Straighten cooling fins if bent using a fin comb
	  ○ Ensure cooling fins are secured and not loose
	  ○ Check coolant level and refill if necessary
		Annual

Performance Testing	• Measure Incoming AC Voltage • Perform Interlock Testing • Check if HMI & Nayax touch screen and pushbutton are operating properly • Perform testing on charging cable using Comemso	Annual

Replacement of Fixed-Life Components

To prevent the device from failure due to worn out components, it is necessary to replace the components before they reach the end of their lifespan. Use the following replacement intervals as a guideline for the estimate of the total running time. Please contact an Enel X representative for further assistance when you replace the parts.

- Charging Cables: Approximately three (3) years
- Intake and exhaust filters: Approximately two (2) years
- Coolant: Every five (5) years

NOTE

Please keep in mind that the replacement interval of each part can vary depending on, for example, the usage environment of the device.

Recommended Parts List

Power Unit / Tower

ITEM	PART NUMBER	PART DESCRIPTION
1	158-0065-01	Polyimide Tape 3/4" Wide (Kapton Tape) 36 yards
2	170-0039-01	Safety Relay RT6 24DC
3	170-0041-01	Door Interlock Power Switch
4	170-0049-01	DC Fan 172x51mm, 24VDC
5	170-0062-01	Ferrite Clamp-On Cores
6	170-0065-01	Hexagonal Rod
7	170-0066-01	Multi-point Latch/Lock
8	170-0067-01	Latch Assembly
9	170-0153-01	Switching Power Supply 24V
10	170-0210-01	CAN / Optic Fiber - Repeater - Extender Bus Line
11	170-0243-01	Switching Power Supply 12V
12	170-0038-01	General Purpose Relay
13	140-0160-01	Control Transformer
14	201-0175-01	50kW Power Module Assembly
15	190-0128-01	HPCT-200-480-2 Harness

Dispenser

ITEM	PART NUMBER	PART DESCRIPTION
1	110-0085-01	SECC Board
2	110-0208-01	Mini PCM with Adjustable Gain
3	110-0212-01	MCU Pedestal 5.0 (for HPCD1-200 configurations)
4	110-0236-01	MCU Pedestal 5.1 (for HPCD1-350 configurations)
5	157-0047-01	Ceramic Tube Fuse
6	158-0106-01	DC Contactor 600A 1500 VDC
7	170-0029-01	Miniature Circuit Breaker
8	170-0031-01	Insert Card Reader
9	170-0032-01	Insert Card Reader USB Cable
10	170-0038-01	General Purpose Relay
11	170-0039-01	Safety Relay RT6 24DC
12	170-0041-01	Door Interlock Power Switch
13	170-0042-01	AV Security Pushbutton Switch
14	170-0062-01	Ferrite Clamp on Cores
15	170-0065-01	Hexagonal Rod
16	170-0066-01	Multi-point Latch/Lock
17	170-0067-01	Latch Assembly
18	170-0110-01	Hard Drive

Recommended Parts List (continuation)

Dispenser

ITEM	PART NUMBER	PART DESCRIPTION
19	170-0113-01	PC Board with CPU
20	170-0142-01	DC Contactor 350A 1500 VDC
21	170-0210-01	CAN / Optic Fiber - Repeater - Extender Bus Line
22	170-0233-01	RFID Card Reader
23	170-0241-01	RFID Card Reader USB Cable
24	170-0243-01	Switching Power Supply 12V
25	170-0288-01	15" Display
26	170-0289-01	Axial Fan 12VDC
27	170-0311-01	Switching Power Supply 24V
28	190-0113-01	Air Cooling Unit
29	190-0131-01	80kW Dispenser CHAdeMO & CCS Harness
30	190-0137-01	SAE Combo Cable (200A) 25'
31	190-0218-01	CHAdeMO Output Cable (200A)
32	190-0289-01	Liquid Cool Cable Standard Length CCS-1
33	190-0499-01	HPCD1-350-01-003 Chad-CCS Harness
34	190-0500-01	HPCD1-350-02-003 CCS-CSS Harness
35	190-0506-01	Cool Cable Coolant 6L
36	190-0523-01	Liquid Cool Cable 4m Left Hand Rotation CCS-1
37	190-0524-01	Liquid Cool Cable 4m Right Hand Rotation CCS-1
38	190-0526-01	Liquid Cool Cable 25' Length CCS-1
39	190-0527-01	Liquid Cool Cable 25' Length CCS-2

FCC INFORMATION

The **JuicePump 150** complies with Part 15 of the FCC rules. Operation is subject to the following two conditions:

1) The charger may not cause harmful interference, and
2) The charger must accept any interference received, including interference that may cause undesired operation.

CAUTION

Changes or modifications to this product by other than an authorized service facility could void warranty, UL and FCC compliance.

11. Product Disposal

Enel X Inc. carefully considers environmental impacts of our products in every stage of the product life cycle – from design, to manufacturing, to usage, and its disposal.

Proper disposal of our product and parts should be observed to reduce environmental impact. Recyclable parts should be used as suitable. Hazardous waste should be disposed through safe and responsible methods.

The disposal of this charger must comply with the national and regional laws and regulations. Dispose the unit in accordance with the applicable environmental regulations of your country.

12. Appendix

12.1. Component Information

a) CCS1 High-Power Liquid Cooled Coupler (500A Rated)

Part Details

Part Number: **190-0289-01**
Manufacturer: **Huber + Suhner**

Standard Position of Connector

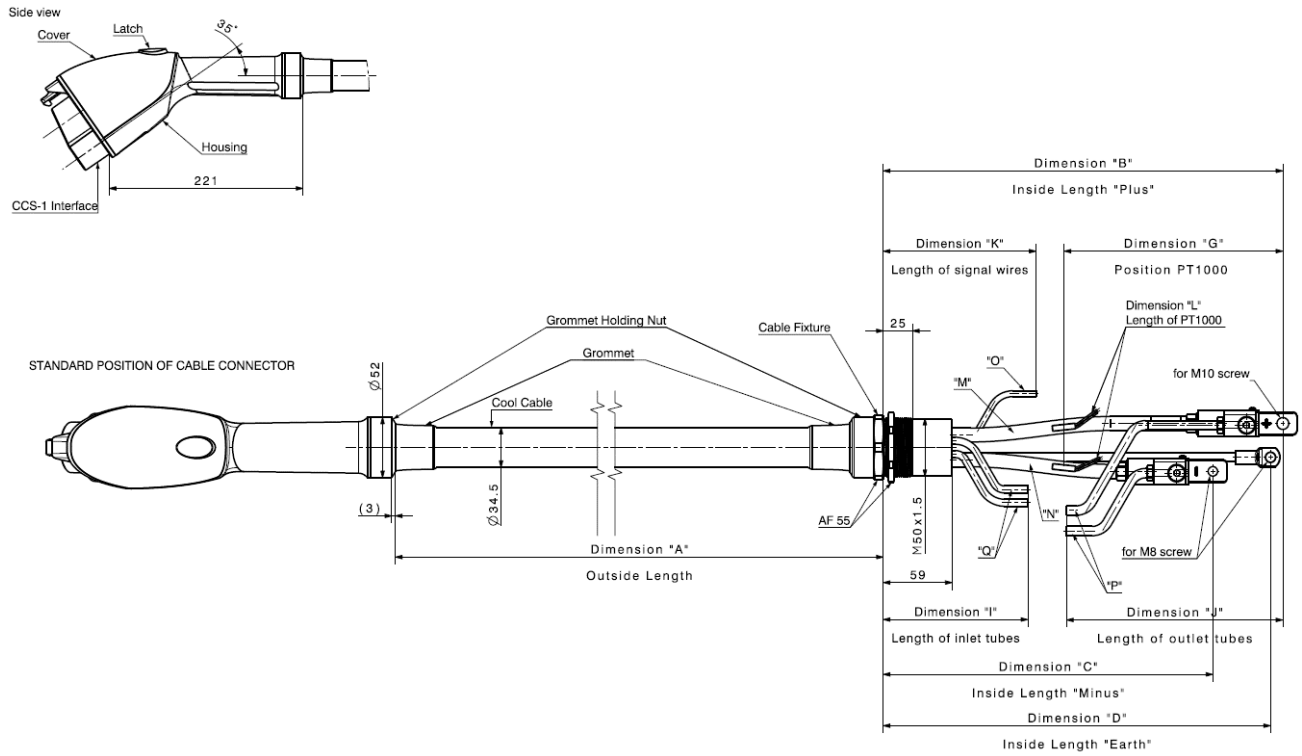

Cable Length or Dimension A : **3400 mm or 11.15 ft**

Optional Longer Cable Length Available with Dimension A of **7620 mm or 25 ft**

Connector Rotated Right 60°±15°

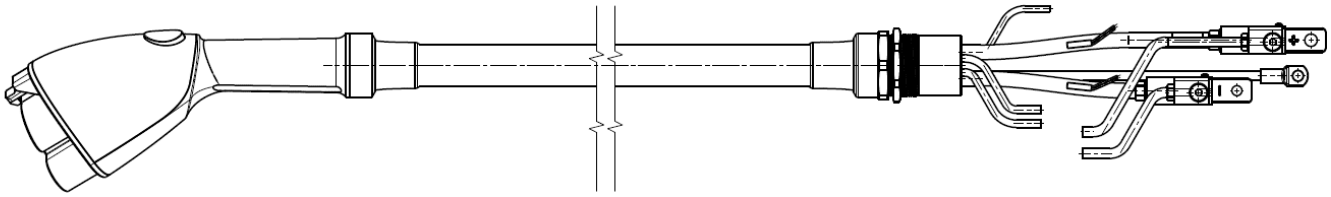

Cable Length or Dimension A : **4009 mm or 13.15 ft**

Connector Rotated Left 60°±15°

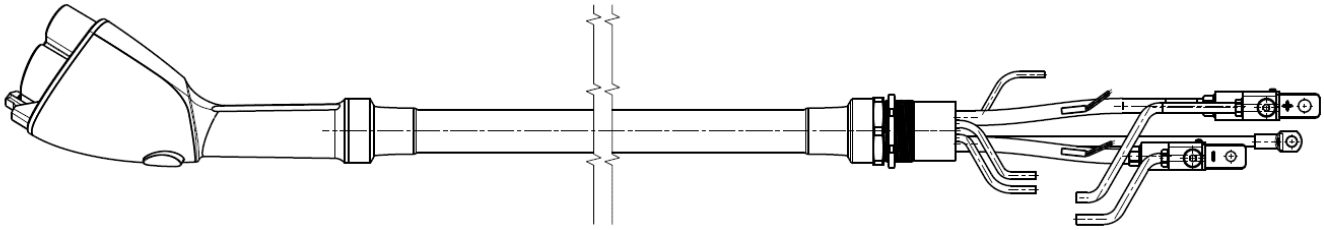

Cable Length or Dimension A : **4009 mm or 13.15 ft**

b) Cooling Unit System

Part Details

Part Number: **190-0113-01**
Manufacturer: **Huber + Suhner**

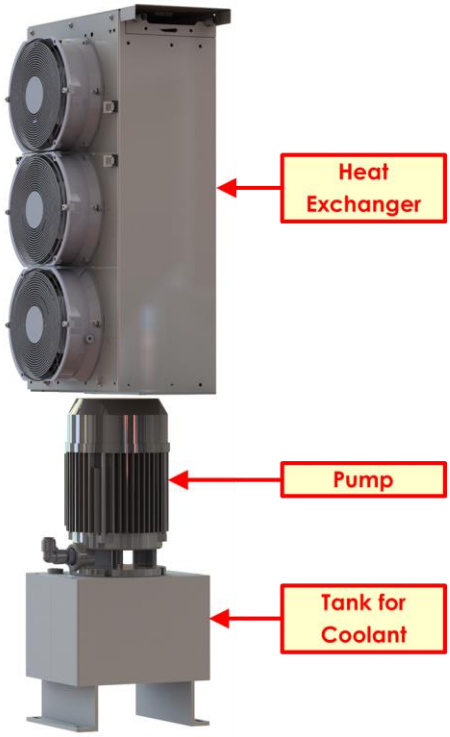

c) Cool Cable Coolant

Part Details

Part Number: **190-0114-01**
Manufacturer: **Huber + Suhner**
Description:

- Non-conducting fully synthetic oil
- Readily biodegradable
- High dielectrical strength
- Non-hazardous
- Excellent resistance to high and low temperatures
- Higher flashpoint and firepoint than conventional mineral-based non-conducting oil: reduces fire risk

**Application Note from supplier on the next page*

HUBER+SUHNER
Excellence in Connectivity Solutions

HUBER+SUHNER AG, 8330 Pfäffikon, Switzerland

HUBER+SUHNER AG
LF Market Management Industry
Tumbelenstrasse 20
8330 Pfäffikon
Switzerland

Max Goeldi
LF Market Manager Industry
Phone +41 44 952 2562
max.goeldi@hubersuhner.com
www.hubersuhner.com

Application Note 23

Reference Coolant C3P-002
Date 28 February 2019
Page 1 of 1

Dear Customer

For the RADOX® High Power Charging System (cooled cable) the Coolant C3P-002 has to be used. (Description: HUBER+SUHNER Cool Cable Coolant C3P-002).
This is a Non-conducting fully synthetic coolant.

Shelf life: 10 years (+10^{0}C up to +40^{0}C)

Service life: 5 years (under the divined operational conditions described in the Application Manual, Doc No. 0000799015)

Re-use: Used Coolant may be re-used if:
- Coolant was in use for a maximum of 6 months
- Coolant is not contaminated with foreign materials / fluids

In case of doubt of possible contamination the Coolant has to be replaced and the complete cooling systems has to be flushed bevor reuse.

For additional Information please consult the Data Sheet for RADOX® High Power Charging System Coolant C3P-002 DOC-0000784407 or the Safety Data Sheet DOC-0000840189

Kind regards

Max Göldi

d) SAE J1772 CCS1 Coupler (200A Rated)

Part Details

Part Number: **190-0137-01**
Manufacturer: **Rema**

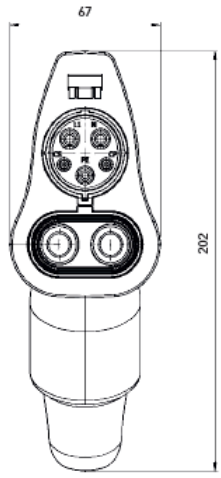

CONNECTOR FRONT VIEW

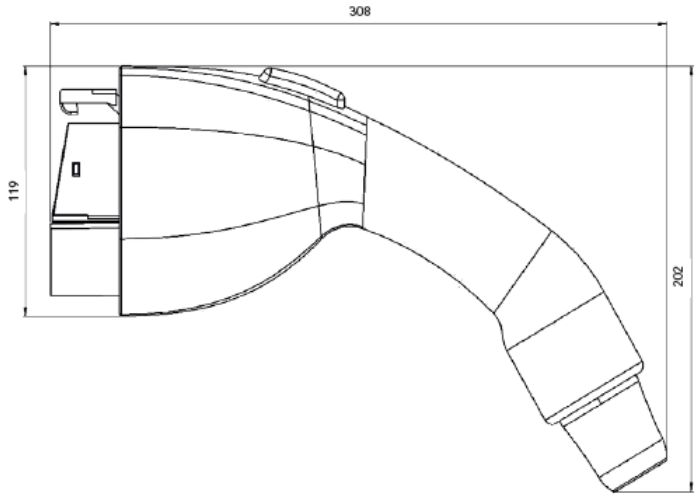

CONNECTOR SIDE VIEW

e) CHAdeMO High Power Coupler (200A Rated)

Part Details

Part Number: **190-0137-01**
Manufacturer: **Rema**

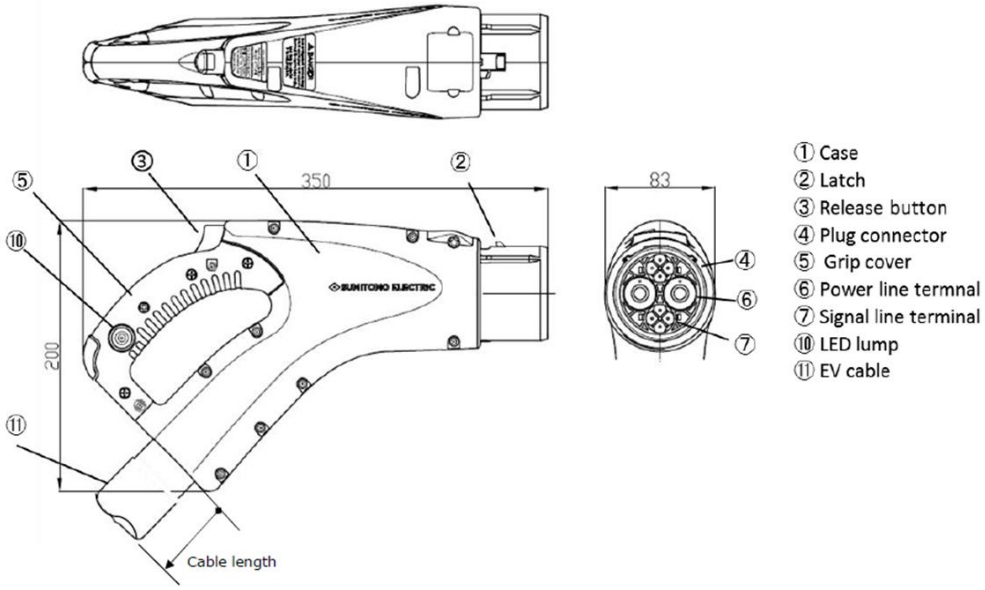

12.2. Cooling Unit System Overview

a) Main Parts

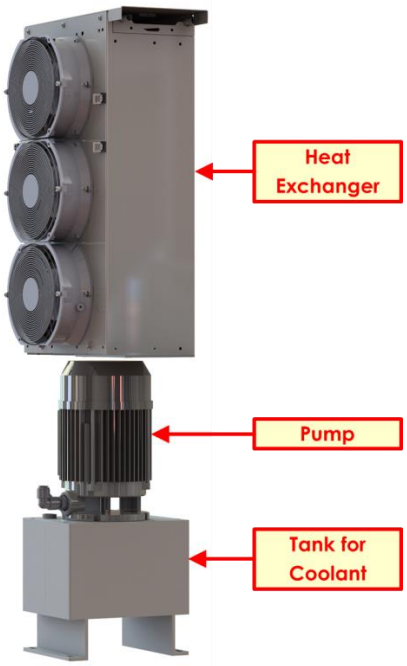

b) Refiling Coolant in Cooling Unit Tank

- Cooling Unit Tank is filled full of coolant prior shipment. In case of low coolant level, refill accordingly.
- Use 6-liter coolant canister. Refer to the table below for the filling value.

Cable length total	Volume tank	Volume heat exchanger	volume cable	Total volume
3 meter	2.9 l	2.0 l	0.3 l	5.2 l
4 meter	2.9 l	2.0 l	0.4 l	5.3 l
5 meter	2.9 l	2.0 l	0.5 l	5.4 l
6 meter	2.9 l	2.0 l	0.6 l	5.6 l
8 meter	2.9 l	2.0 l	0.8 l	5.7 l

If the cable length used is between the specified cable length in the table, use the less amount of total volume filling.

- To ensure better fill-in process, the coolant temperature must be over 12°C.
- Open filling plug from tank using 6mm Allen wrench.

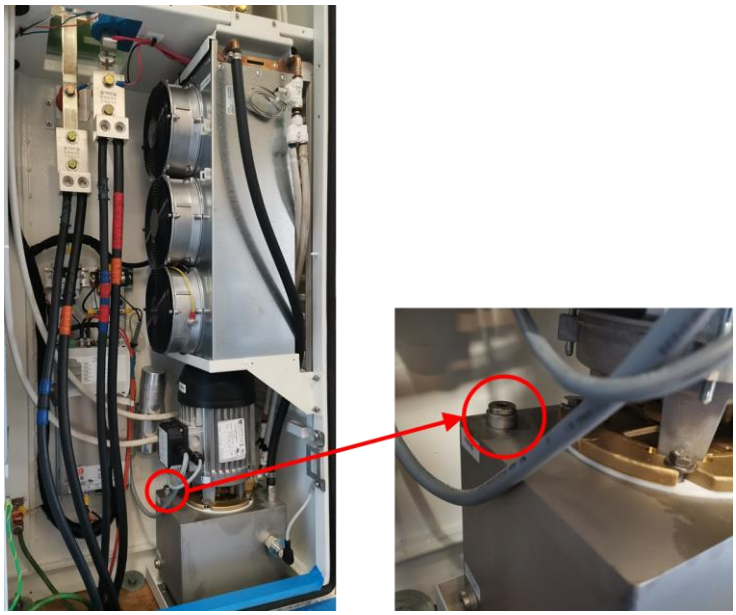

- Fill 2.9 liters coolant in tank using a funnel or tube.

- Close tank with plug.

- Start pump for around 60 seconds.
  - Place an object to continuously engage the relay contactor and start the pump.

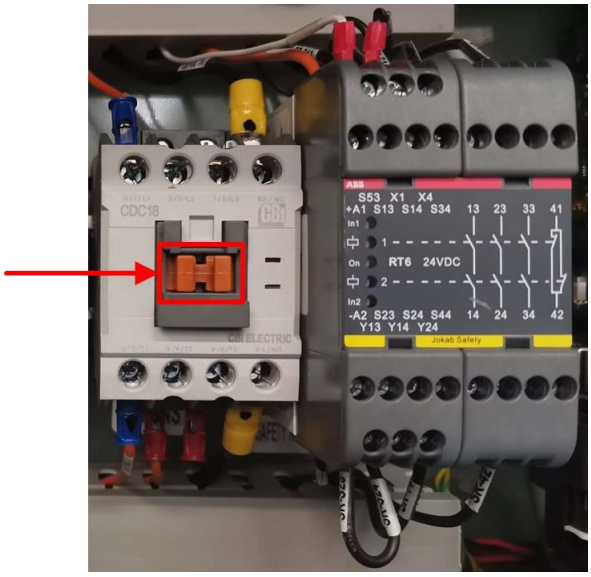

  - Coolant flows into the cable and heat exchanger (copper pipes)
- Stop system running.
- Fill in remaining coolant amount using a funnel or tube. Extra careful, pump could still be warm).
- Close tank with filling plug.
- Cooling unit is ready.

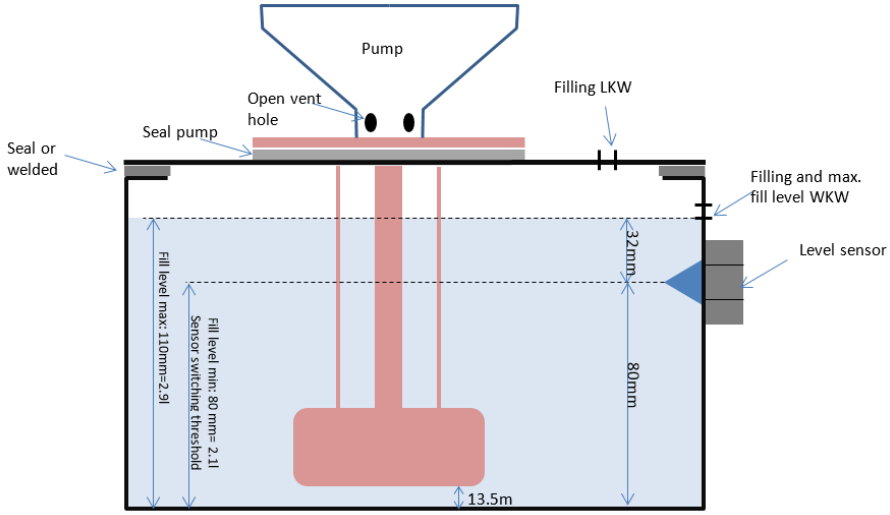

REVISION HISTORY

Revision	Date	Description	Originator
0	17-Jun-21	Initial Release	Dante Sanchez / Rosh Dihayco